主位置決めストレートピン/補助位置決めストレートピン

CROSSED INSPECTION PIN / OVAL INSPECTION PIN

Crossed Inspection Pin

JCXH

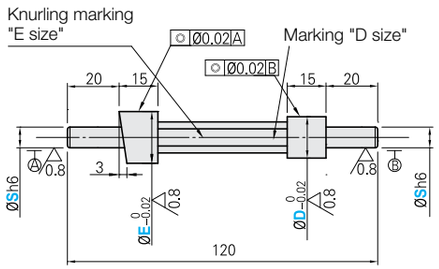

Name	M Material	S Surface Treatment	H Hardness
Handle	SS400	Hard Chrome	—
Gauge	SKD11	Hard Chrome	58~62HRC

S<E
S<D

Catalog No.	0.01 mm Increment			Engraved content
	D	E	S	
JCXH	6~25mm (D>S)	6~25mm (E>S)	3~18mm	ØA Engraved ØE Engraved

Order

Catalog No.	—	D	—	E	—	S
JCXH	—	20.00	—	25.00	—	8.00

Delivery **Quotation**

Oval Inspection Pin

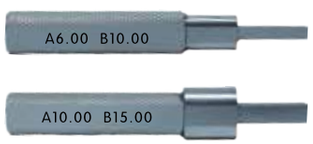

JCXY

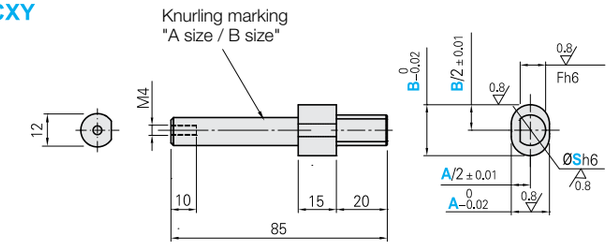

Name	M Material	S Surface Treatment	H Hardness
Handle	SS400	Hard Chrome	—
Gauge	SKD11	Hard Chrome	58~62HRC

S<A
S<B

Catalog No.	0.01 mm Increment		S	F	Engraved content
	A	B			
JCXY	6~25 (A>S)	6~25 (B>A)	3	2.5	A Engraved B Engraved
			4	3	
			6	5	
			8	6	
			10	8	
			12	10	

Order

Catalog No.	—	A	—	B	—	S
JCXY	—	20.00	—	25.00	—	8

Delivery **Quotation**

ピン止めクリップユニット

LOCK PIN CLIP

Lock Pin Clip

CFSZ

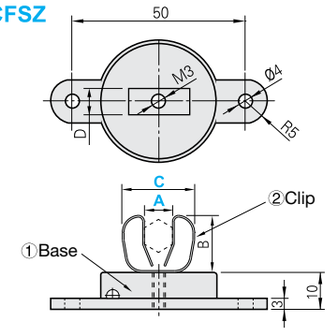

Name	M Material
Base	Mn - Zn
Clip	Steel

Clamping Method	Catalog No.		C	B	D
	Type	A			
Spring clamping	CFSZ	10	22	16	10
		14	32	25	14

Order

Catalog No.	—	C
CFSZ 10	—	22

Delivery **Quotation**

Lock Pin Clip

CFTJ

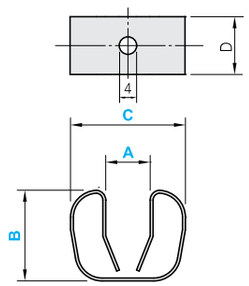

M Material Steel
S Surface Treatment Nickel plating

Clamping Method	Catalog No.		C	B	D
	Type	A			
Spring clamping	CFTJ	10	22	16	10
		14	32	25	14

Order

Catalog No.	—	C
CFTJ 10	—	22

Delivery **Quotation**

Example
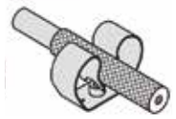
To tighten pin and clip may need little adjustment case by case