Single Axis Actuators LX30 Motor Folded Type

For Single Axis Actuator LX Series selections, please use our 2D and 3D CAD data and Technical Calculation Software (free of charge).
http://download.misumi.jp/mol/fa_soft.html

LX Related Information
Specifications P.411 ~ P.414
Selection / Life Calculation Example P.2235~P.2238

Convenient Sensor Sets are also available. P.428

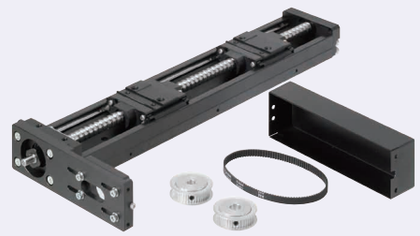

RoHS

Specifications	
LX30	
Standard / Cover	
Screw Shaft Dia. (mm)	10
Lead (mm)	5, 10
Accuracy	High Grade

A Accessory

① Motor Adapter Plates
M Steel S Low Temperature Black Chrome Plating
② Adapter Plate Screw 4 pcs. M SUSXM7
③ High Torque Timing Pulley Part Number: HTPA44S2M060
④ High Torque Timing Belt Part Number: HTBN230S2M-60

Part Number	Standard Grease		Lubrication Unit MX-equipped (Standard Grease)	
	High Grade Standard	High Grade with Cover	High Grade Standard	High Grade with Cover
Lead 5	LXR3005	LXR3005C	LXR3005-MX	LXR3005C-MX
Lead 10	LXR3010	LXR3010C	LXR3010-MX	LXR3010C-MX

Components	Base (Rail)	Block	Motor Bracket	Support Side Bearing with Housing	Cover	Stopper	Precision Ball Screw (Ground)
M Material	Carbon Steel	SCM Material	A5052	A5052	A6063	NBR	SCM415
S Surface Treatment	Low Temperature Black Chrome Plating	Low Temperature Black Chrome Plating	Black Baked Paint	Black Anodize	Black Anodize	-	-
H Hardness	Induction Hardened HRC58 ~ 64	HRC58~62	-	-	-	-	HRC58~62

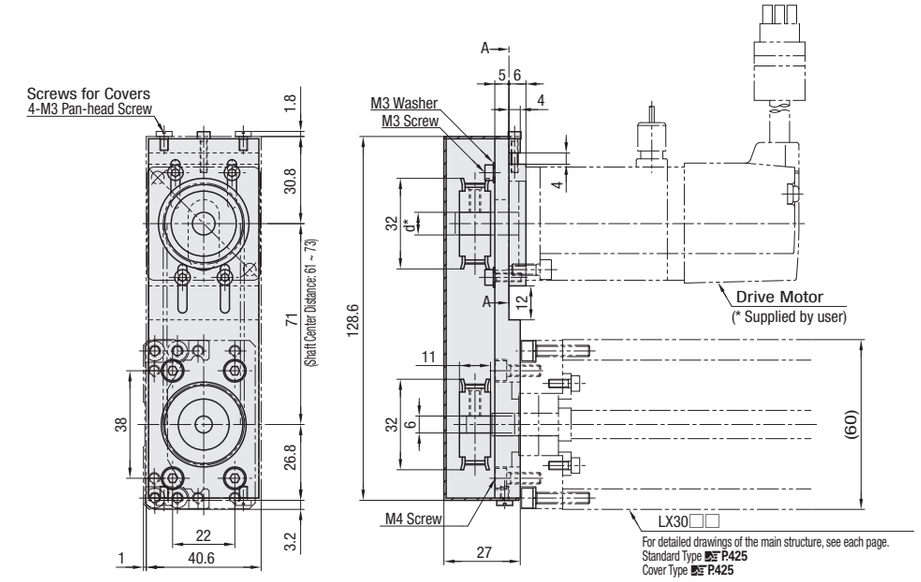

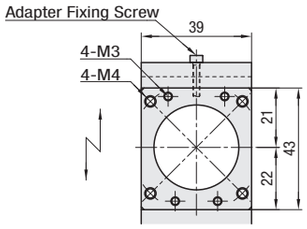

Arrow View A-A

<Motor Adapter Plates>
* For details of motor adapter plate dimensions, see the right-hand page.

For recommended shaft center distance for belt tension 71mm, deflection when the center of belt is pressed with less than 1N is 1.1mm.
Precision specification value is the value achieved after fixing rails. (It is not a value before tightening the rail screws.) For values, see P.413.
The actuator shaft end is of D cut specification.

Included High Torque Timing Pulley Part Number

Pulley mounting side		Part Number
Actuator mounting side		HTPA44S2M060-A-P6
Motor Side	For Adapter Plate RA3038	HTPA44S2M060-A-N8
	For Adapter Plate RA3040	
	For Adapter Plate RT3042	HTPA44S2M060-A-P6
	No Adapter Plate N5	HTPA44S2M060-A-P5
	No Adapter Plate N6	HTPA44S2M060-A-P6
	No Adapter Plate N8	HTPA44S2M060-A-N8

Part numbers with P at the end are of round hole+tap type.
Part numbers with N at the end are of Key-slot hole+tap type.

Part Number		Block Qty.	Motor Adapter Plate	Base Overall Length (L)	Details of Mounting Hole Dimensions P.425, 426 A	P1	P2	B	Number of Pitches	Number of Holes (N)
(High Grade Standard) LXR3005 LXR3010	(High Grade with Cover) LXR3005C LXR3010C	Long Blocks (1 pc.)B1 (2 pcs.)B2 For B2, L≥300	(Servo) RA3038 RA3040	125	12.5	-	100	12.5	1	4
(Lubrication Unit MX Standard) LXR3005-MX LXR3010-MX	(Lubrication Unit MX with Cover) LXR3005C-MX LXR3010C-MX	Short Blocks (1 pc.)S1 (2 pcs.)S2 *Lubrication Units MX-equipped types are available in B1/S1 only.	(Stepping) RT3042 *(No Adapter Plate) N5 (Pulley Inner Dia. Ø5) N6 (Pulley Inner Dia. Ø6) N8 (Pulley Inner Dia. Ø8)	150	25			25		
				200	50	100		50		
				250			50		2	6
				300			100			
				350			50		3	8
				400			100			
				450			50		4	10
				500			100			
				550			50		5	12
				600			100			

* Motor adapter plate and mounting screws are not included with No Adapter Plate Type.

Effective Stroke / Mass

Base Length (L)	* Effective Stroke MX-unequipped B1	B2	S1	S2	MX-equipped B1	S1	Total Mass (kg) LXR30□□ B1	B2	S1	S2	LXR30□□C B1	B2	S1	S2
125	29	-	54.5	-	-	-	1.55	-	1.43	-	2.01	-	1.75	-
150	54	-	79.5	17	-	65.5	1.72	-	1.60	1.78	2.17	-	1.92	2.23
200	104	-	129.5	67	90	115.5	2.06	-	1.93	2.11	2.50	-	2.25	2.57
250	154	-	179.5	117	140	165.5	2.39	-	2.27	2.45	2.84	-	2.59	2.91
300	204	116	229.5	167	190	215.5	2.73	3.04	2.60	2.78	3.17	3.74	2.92	3.24
350	254	166	279.5	217	240	265.5	3.06	3.37	2.94	3.12	3.51	4.08	3.26	3.58
400	304	216	329.5	267	290	315.5	3.40	3.71	3.27	3.46	3.85	4.41	3.60	3.91
450	354	266	379.5	317	340	365.5	3.74	4.04	3.61	3.79	4.18	4.75	3.93	4.25
500	404	316	429.5	367	390	415.5	4.07	4.38	3.95	4.13	4.52	5.08	4.27	4.58
550	454	366	479.5	417	440	465.5	4.41	4.72	4.28	4.46	4.85	5.42	4.60	4.92
600	504	416	529.5	467	490	515.5	4.74	5.05	4.62	4.80	5.19	5.76	4.94	5.26

* Effective stroke is indicated in dimensions with a margin of 2.5mm each from the ends.
0.011kg will be added to MX-equipped types.

Accuracy Standards

Accuracy Standards	L≤400	L>450
	High Grade	
Positioning (mm)	0.06	0.1
Backlash (mm)	0.02	0.02
Positioning Repeatability (mm)	±0.005	±0.005
Running Parallelism (mm)	0.025	0.035
Starting Torque (N · cm)	4	

Static Load Capacity / Allowable Moment

Block Qty.	Block Qty.	Static Load Capacity (N)	Allowable Static Moment (N • m) Ma	Mb	Mc
Long Block	B1	17218	126	126	387
	B2	34436	1515	1515	774
Short Block	S1	9271	63	63	208
	S2	18542	579	579	417

Reference values are for a static state. For life calculation, use our technical calculation software.
For Allowable Static Moment, see P.411.

Max. Velocity

Max. Velocity (mm/sec)	L125~L450	L500	L550	L600
LXR3005□□	410	370	300	250
LXR3010□□	830	740	600	500

The Max. Velocity is reference values derived from ball screw critical speeds and DN values but not guarantee data considering the motor's conditions.

Motor Adapter Plate Dimensional Drawing

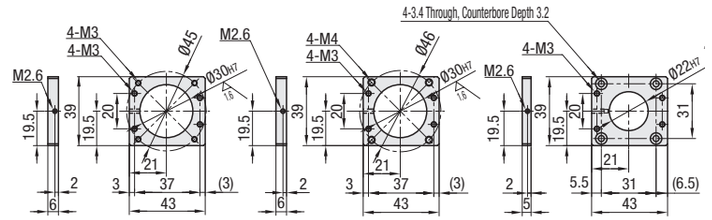

Servo Motor Application Table

Part Number	Flange Size	Manufacturer	Product Number	Wattage	Applicable Motor Shaft Dia.
RA3038	□38	Panasonic	MSMD5A	50W	Ø8
			MSME5A		
			MSMD01*	100W	
			MSME01*		
RA3040	□40	Yasukawa Electric Corporation	SGMJV-A5	50W	
			SGMAH-01	100W	
		Mitsubishi Electric Corporation	HG-MR053	50W	
			HG-MR13	100W	
		Sanyo Denki Co., Ltd.	Q1AA04005D	50W	
			Q1AA04010D	100W	
		Omron Corporation	R88M-K10030		
		Keyence Corporation	MV-M05	50W	
			SV-M005		
			MV-M10	100W	
			SV-M010		

Stepping Motor Application Table

Part Number	Flange Size	Manufacturer	Product Number	Type	Applicable Motor Shaft Dia.
RT3042	□42	Oriental Motor Motor	PK24*	2-phase	Ø6
			RKS54*	5-phase	
			AR46	αStep	

* When selecting the motor shaft diameter Ø5, please select the alteration NBP (No Belt / No Pulley) and purchase the pulley and belt separately.
LXR30□□-□□-RT3040-□□□-NBP
High Torque Timing Pulley: HTPA44S2M060-A-P5
High Torque Timing Belt: HTBN230S2M-60

Ordering Example

Part Number	-	Block Qty.	-	Motor Adapter Plates	-	Base Length (L)	-	(NBP)
LXR3010C	-	B1	-	RA3040	-	600		
LXR3005-MX	-	B1	-	RA3040	-	600		
LXR3010C	-	B1	-	RA3040	-	600	-	NBP

Alterations

Alteration	Code	Spec.
No Belt / No Pulley	NBP	Excluded from the set.

Sensor Set P.428

High Grade Unit Price

Part Number	L=125 (Lead 5 only)	L=150	L=200	L=250	L=300	L=350	L=400	L=450	L=500	L=550	L=600	Motor Adapter Plates	Block Qty.	Screw Shaft Dia.	Lead
LXR30□□-B1/S1-□												Servo Stepping No Adapter Stepping No Adapter Plate	1	10	5
LXR30□□-B2/S2-□	-												2		
LXR30□□C-B1/S1-□													1		10
LXR30□□C-B2/S2-□	-												2		