Note that, for some of the types shown here, order might be unable to be received by the MISUMI Indonesia offices.

# [High Precision] XY-Axis, Rotary, Feed Screw / [High Precision] Dovetail Slide, Feed Screw

**Features:** Compact Sized and Integrated Type Stages rotatable and slidable based on XY-Axis.

## XY-Axis + Rotary

Scale is provided with the actual product. For specifications, see Specification Diagram.

RoHS10

### XYRSL60

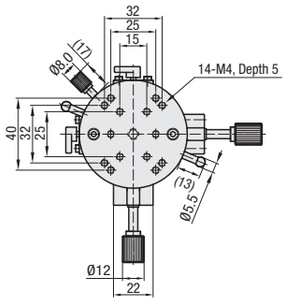


### XYRSL90

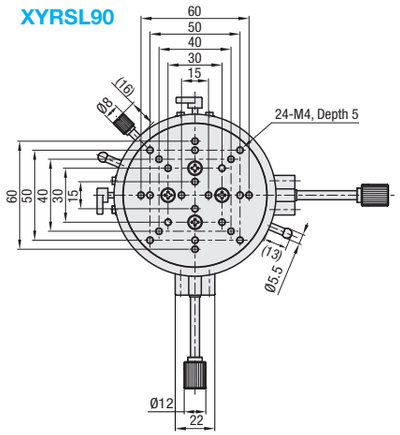


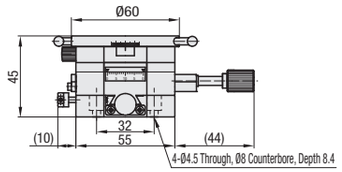


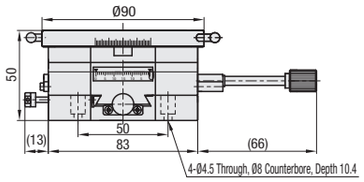


M Material: Aluminum Alloy
S Surface Treatment: Black Anodize

| Part Number Type | No. | Stage Surface (mm) | Travel Distance (mm) | Travel per Rotation (mm) | Load Capacity (N) | Straightness (μm) | Weight (kg) | Unit Price |
|---|---|---|---|---|---|---|---|---|
| XYRSL | 60 | Ø60 | X: ±21<br>360° Rotation | 4.2 | 34.3 | 30 | 0.39 | |
| | 90 | Ø90 | X: ±35<br>360° Rotation | | | | 0.88 | |

Ordering Example: Part Number XYRSL60

**Features:** XZ-Axis dovetail slide stages with 15mm thickness. Shipped orthogonally aligned to ease customer's assembly steps.

## XZ-Axis Feed Screw (Lead 0.5mm)

X-Axis P.1897
Z-Axis P.1962

RoHS10

### XZEG

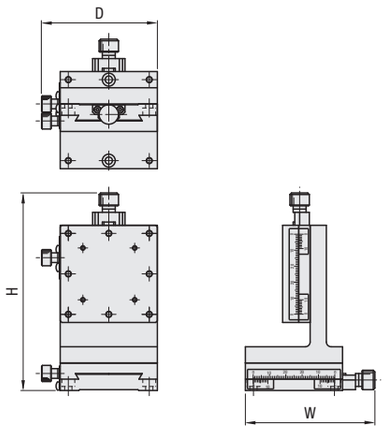


M Material: (Main Body) Low Cadmium Brass (Feed Knob) Aluminum
S Surface Treatment: Black Fluororesin Treatment

Standard Stages with Similar Specifications: Combination of XFES (**P.1896**) and ZFES (**P.1961**)

| Part Number Type | No. | Stage Configuration Bottom | Top | Stage Surface (mm) | External Dimension (mm) W | D | H | Travel Distance (mm) X | Z | Load Capacity (N) | Weight (kg) | Accessory (4 pcs.) Type M-L | Unit Price |
|---|---|---|---|---|---|---|---|---|---|---|---|---|---|
| XZEG | 25 | XEG25 | ZEG25 | 25x25 | 45 | 31.7 | 72.5 | ±5 | ±5 | 9.8 | 0.17 | SCB2-8 | |
| | 40 | XEG40 | ZEG40 | 40x40 | 60 | 46.7 | 95.0 | ±7 | ±7 | | 0.46 | SCB3-6 | |
| | 60 | XEG60 | ZEG60 | 60x60 | 80.5 | 71.8 | 122.5 | ±9 | ±9 | 19.6 | 1.35 | SCB4-6 | |

For dimension details, see the CAD data and the catalog page for each stage. (XEG: **P.1897**, ZEG: **P.1962**)

Ordering Example: Part Number XZEG25



# [High Precision] Dovetail Slide, Rack & Pinion / X: Feed Screw, Z: Rack & Pinion

**Features:** Rapid feeding XZ-Axis stages with 18mm travel per knob rotation. Shipped orthogonally aligned to ease customer's assembly steps.

## XZ-Axis, Rack & Pinion

X-Axis P.1911
Z-Axis P.1957

RoHS10

### XZFG

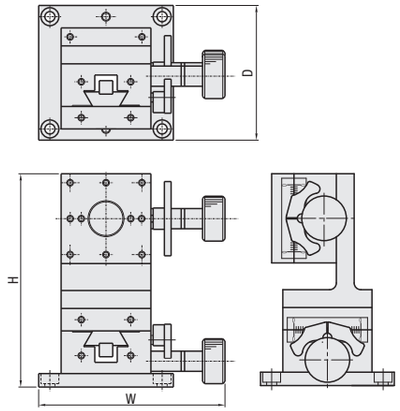


| Part Number | M Material | S Surface Treatment |
|---|---|---|
| XZFG25 | Low Cadmium Brass | Black Fluororesin Treatment |
| XZFG40 | Aluminum Alloy | Black Anodize |
| XZFG60 | | |

| Part Number Type | No. | Stage Configuration Bottom | Top | Stage Surface (mm) | External Dimension (mm) W | D | H | Travel Distance (mm) X | Z | Load Capacity (N) | Weight (kg) | Accessory (4 pcs.) Type M-L | Unit Price |
|---|---|---|---|---|---|---|---|---|---|---|---|---|---|
| XZFG | 25 | XFG25 | ZFG25 | 25x25 | 40 | 38 | 55.5 | ±5 | ±5 | 6.9 | 0.20 | SCB2-12 | |
| | 40 | XFG40 | ZFG40 | 40x40 | 83 | 60 | 95.0 | ±10 | ±10 | 14.7 | 0.45 | SCB4-6 | |
| | 60 | XFG60 | ZFG60 | 60x60 | 110 | 80 | 105.5 | ±20 | +20 | 19.6 | 1.25 | SCB4-6 | |

For dimension details, see the CAD data and the catalog page for each stage. (XFG: **P.1911**, ZFG: **P.1957**)

For orders larger than indicated quantity, please request a quotation.

Ordering Example: Part Number XZFG25

**Features:** Travel per knob rotation for X-Axis is 0.5mm, and for Z-Axis is 14/20mm. XZ stage with a fine feed X-Axis and a rapid feed vertical Z-axis.

## Moving Horizontal Surface XZ Stage

RoHS10

### XZLNG25

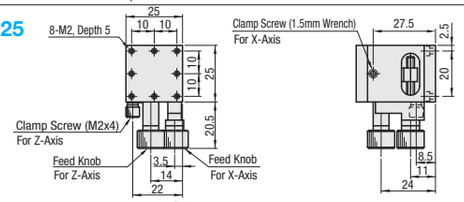


### XZLNG40

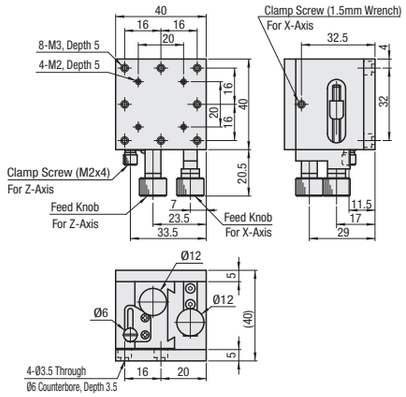


### XZLNG60

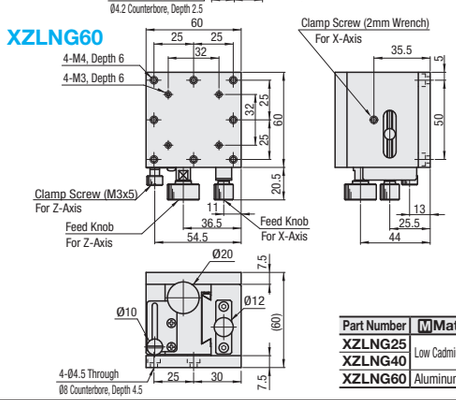


| Part Number | M Material | S Surface Treatment |
|---|---|---|
| XZLNG25 | Low Cadmium Brass | Black Fluororesin Treatment |
| XZLNG40 | | |
| XZLNG60 | Aluminum Alloy | Black Anodize |

| Part Number Type | No. | Stage Surface (mm) | Travel Distance (mm) | Travel per Rotation (mm) | Load Capacity (N) | Travel Accuracy Straightness | Weight (kg) | Accessory (4 pcs.) Type M-L | Unit Price |
|---|---|---|---|---|---|---|---|---|---|
| XZLNG | 25 | 25x25 | X: ±5 Z:+10 | X: 0.5 Z=14 | 9.8 | 30μm | 0.17 | SCB2-5 | |
| | 40 | 40x40 | X: ±7 Z:+10 | | | | 0.51 | SCB3-6 | |
| | 60 | 60x60 | X: ±10 Z:+26 | X: 0.5 Z=20 | | | 0.62 | SCB4-8 | |

No graduated scale on XZLNG.

For orders larger than indicated quantity, please request a quotation.

Ordering Example: Part Number XZLNG60