[High Precision] Dovetail Slide, Feed Screw

Long (Selectable lead type), Square

Features: Dovetail Slide Feed Screw stage with selectable screw lead in 2mm, 5mm, 10mm. Long strokes equivalent of Rack & Pinion stages. Also suitable for vertical uses.

Z-Axis Long
(Selectable lead type)

X-Axis P.1901

RoHS10

ZLSL

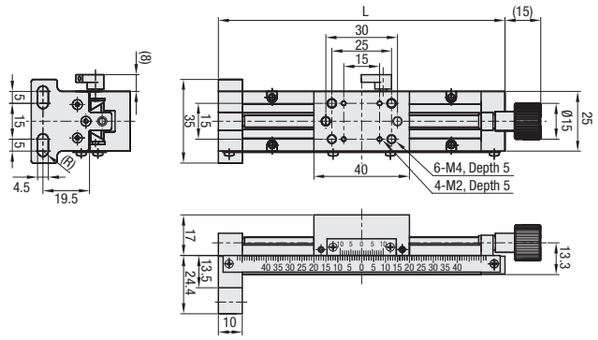

The scale in the above figure is for L120, and not for L90,150.
The external dimensions will be the same if L is the same, even if the move distance per knob rotation is different.

M Material: Aluminum Alloy
S Surface Treatment: Black Anodize

Part Number TYPE	No.	Travel per Rotation (mm)	Travel Distance (mm)	L	Load Capacity (N)	Travel Accuracy (μm) Straightness	Weight (kg)	Unit Price
ZLSL	90	2	±27	90	14.7	30	0.18	
		5						
		10						
	120	2	±42	120			0.2	
		5						
		10						
	150	5	±57	150		40	0.22	
		10						

Resolution (Vernier Scale Indication): 0.1mm/division
Knob Cover HDCVR15 (Sold Separately): Ø15 knobs can be increased in diameter by installing the cover. P.2004
Adjustable Plate XPLT40: Use this plate when connecting stages with non-matching mounting holes. P.1915

Ordering Example — Part Number: ZLSL90-5

Features: Low profile (18mm height/axis) Dovetail Slide Stages with smooth 4.2mm lead feeding.

Z Axis, Square
(Lead 4.2mm)

X-Axis P.1899
XY-Axis P.1932

ZSC60

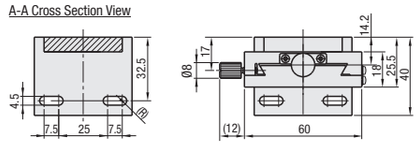

ZSC40

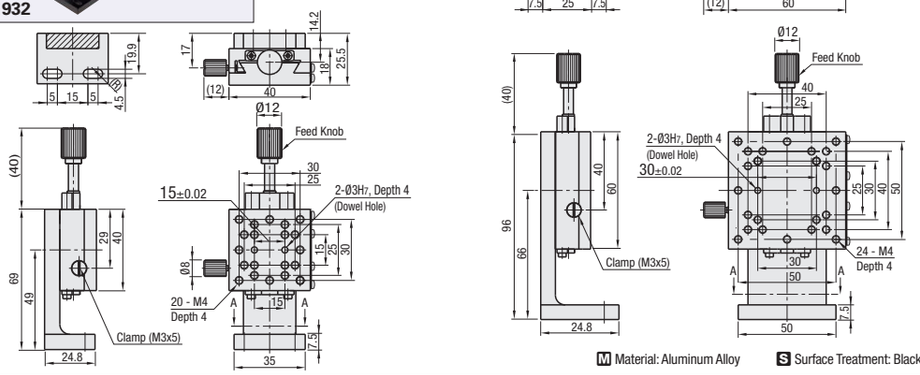

M Material: Aluminum Alloy
S Surface Treatment: Black Anodize

Part Number Type	No.	Stage Surface (mm)	Travel Distance (mm)	Travel per Rotation (mm)	Load Capacity (N)	Travel Accuracy (μm) Straightness	Weight (kg)	Accessory (2 pcs.) Type M-L	Unit Price
ZSC	40	40x40	±11	4.2	9.8	20	0.16	CBST4-12	
	60	60x60	±21		14.7	30	0.31	CBST4-12	

Resolution (Vernier Scale Indication): 0.1mm/division
Extension Cover HDEXT12 (Sold Separately): Ø12 feed screw knob can be extended. P.2004
XY-Axis Mounting Plate XPLTE: Use this plate when connecting stages with non-matching mounting holes. P.1915

Ordering Example — Part Number: ZSC40

Alterations — Part Number - (R): ZSC40 - R

Alteration	Clamp Position Change (Right/Left Reversed)
Spec.	ZSC□□-R ZSCL□□-R 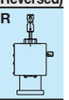
Code	R

See the CAD data for details.

Tips: Knob Extension Method

Knob length and diameter can be increased by utilizing the M6, Depth 14 tapped hole.
(Ex.) Seven Lobed Knob (2-P.1171) NKSM6-30 can be mounted to extend the knob by 36mm.
Use adhesive to prevent the knob extension from pulling off.

[High Precision] Dovetail Slide, Feed Screw

Rectangular / Reinforced Clamp / Low Profile (Lead 4.2mm)

Features: Dovetail Slide Stages with smooth 4.2mm lead feed screw. Left/Right Reversed configuration is also available.

Z-Axis, Rectangular
(Lead 4.2mm)

X-Axis P.1900
XY-Axis P.1936

ZSL60, 90

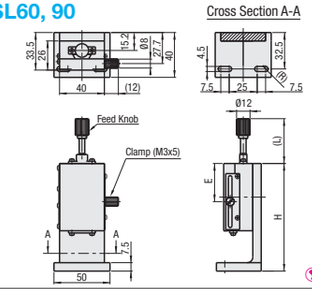

• Upper Mounting Hole Dimensions

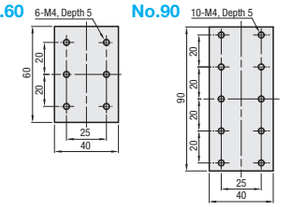

See the CAD data for details.

M Material: Aluminum Alloy
S Surface Treatment: Black Anodize

Part Number Type	No.	Stage Surface (mm)	Travel Distance (mm)	Travel per Rotation (mm)	H	(L)	E	Load Capacity (N)	Travel Accuracy (μm) Straightness	Weight (kg)	Accessory (2 pcs.) Type M-L	Unit Price
ZSL	60	60x40	±21	4.2	96	40	34	19.6	30	0.33	CBST4-12	
	90	90x40	±35		140	60	49			0.45		

Resolution (Vernier Scale Indication): 0.1mm/division
Extension Cover HDEXT12 (Sold Separately): Ø12 feed screw knob can be extended. P.2004
Adjustable Plate XPLT: Use this plate when connecting stages with non-matching mounting holes. P.1915

Ordering Example — Part Number: ZSL60

Alterations — Part Number - (R): ZSL60 - R

Alteration	Spec.	Code
Clamp Position (Left/Right Reversed)		R

See the CAD data for details.

Features: The feed knob is directly retained with a split clamp, resulting in less position drift.

Z-Axis, Reinforced Clamp
(Lead 4.2mm)

X-Axis P.1900
XY-Axis P.1936

ZSLCL60, 90

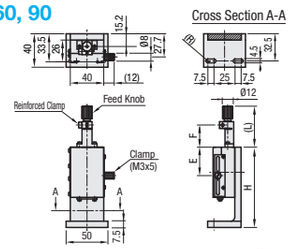

• Upper Mounting Hole Dimensions

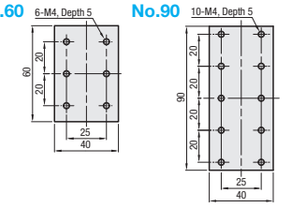

See the CAD data for details.

M Material: Aluminum Alloy
S Surface Treatment: Black Anodize

Part Number Type	No.	Stage Surface (mm)	Travel Distance (mm)	Travel per Rotation (mm)	H	(L)	E	F	Load Capacity (N)	Travel Accuracy (μm) Straightness	Weight (kg)	Accessory (2 pcs.) Type M-L	Unit Price
ZSLCL	60	60x40	±21	4.2	96	49	34	26.5	19.6	30	0.32	CBST4-12	
	90	90x40	±35		140	63	49	40.5			0.40		

Resolution (Vernier Scale Indication): 0.1mm/division
Extension Cover HDEXT12 (Sold Separately): Ø12 feed screw knob can be extended. P.2004
Adjustable Plate XPLT: Use this plate when connecting stages with non-matching mounting holes. P.1915
There will be residual clearances with carriage retaining only with a Reinforced Clamp. Use a Clamp Screw in combination.

Ordering Example — Part Number: ZSLCL60

Alterations — Part Number - (R): ZSLCL60 - R

Alteration	Spec.	Code	Price Adder
Clamp Position (Left/Right Reversed)		R	Free of Charge

See the CAD data for details.

Features: Z-Axis, Low Profile Type XSLC. Are suitable for use in limited spaces.

Z-Axis, Low Profile
(Lead 4.2mm)

X-Axis P.1900
XY-Axis P.1936

ZSLC60, 90

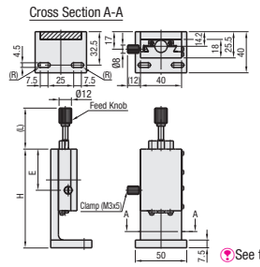

• Upper Mounting Hole Dimensions

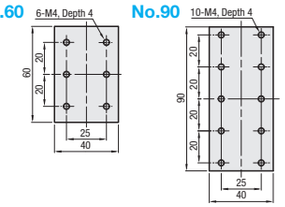

See the CAD data for details.

M Material: Aluminum Alloy
S Surface Treatment: Black Anodize

Part Number Type	No.	Stage Surface (mm)	Travel Distance (mm)	Travel per Rotation (mm)	H	(L)	E	Load Capacity (N)	Travel Accuracy (μm) Straightness	Weight (kg)	Accessory (2 pcs.) Type M-L	Unit Price
ZSLC	60	60x40	±21	4.2	96	40	40	14.7	30	0.27	CBST4-12	
	90	90x40	±35		140	60	55			0.35		

Resolution (Vernier Scale Indication): 0.1mm/division
Extension Cover HDEXT12 (Sold Separately): Ø12 feed screw knob can be extended. P.2004
Adjustable Plate XPLT: Use this plate when connecting stages with non-matching mounting holes. P.1915

Ordering Example — Part Number: ZSLC90

Alterations — Part Number - (R): ZSLC60 - R

Alteration	Spec.	Code
Clamp Position (Left/Right Reversed)		R

See the CAD data for details.