GEAR MOTOR

OUTPUT (HP)	MODEL SYMBOL	VOLTAGE (V)	FREQ. (Hz)	SPEED (min^{-1})	POLES	TH. CLASS	MASS (kg)
2	GH32-150-5	220/380	50	300	4	F	27
2	GH32-150-10	220/380	50	150	4	F	28
2	GH32-150-15	220/380	50	100	4	F	28

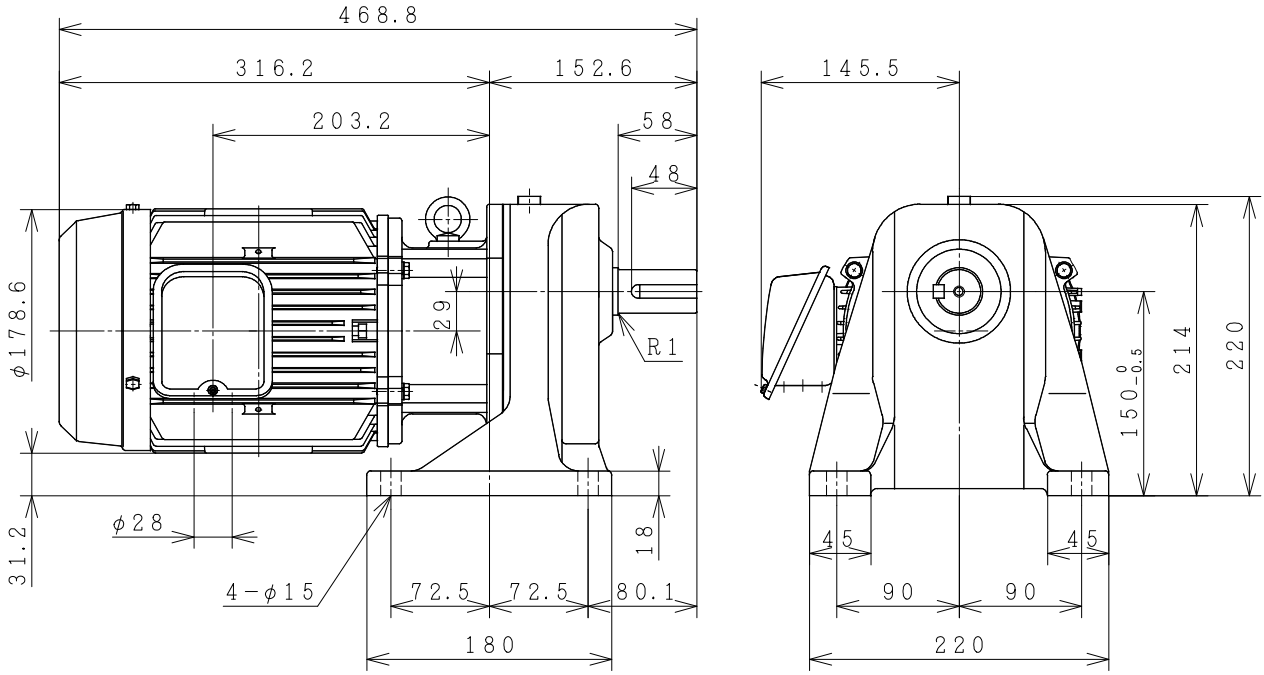

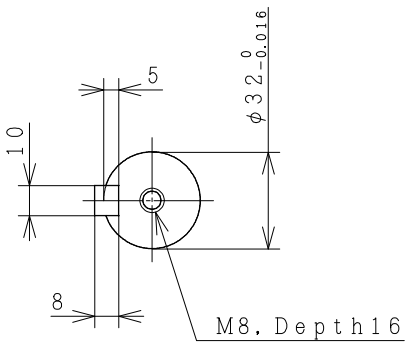

PROJECTION

CUSTOMER	QTY.	ORDER No.	WORK No.	REV.

DWN.	D. ITTIDECH	24-Jul-2015	DIMENSIONS	HITACHI Hitachi Industrial Technology (Thailand),Ltd.	HITT WORKS DWG. No. 4HTD03133
CHKD.	M. KAMIZONO				SH.
APPD.	M. KAMIZONO				

FRAME SIZE (GH) 1.5kW 1/15, 1/10, 1/5