■Sheet lifter units

SLM

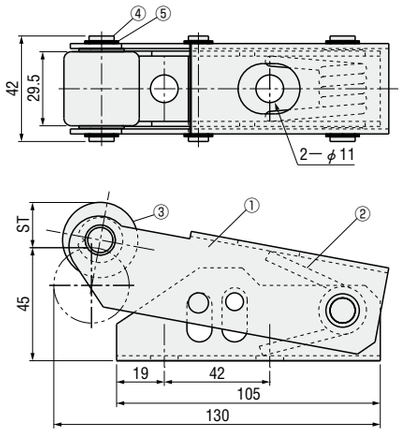

① M SPCC Black oxide (Fe_3O_4)
② M SWP—A
③ M SS400 Carburizing and quenching
④ M S45C Black oxide (Fe_3O_4)
⑤ Oil-free bushing
※Fixing bolt (M10 × 2) is NOT provided.

Lifting load P (N)		Catalog No.		
min.	max.	Type	Stroke ST (mm)	Initial load P (N)
35	65	SLM	18	35
50	85			50
35	85		28	35
50	105			50

Order — Catalog No. SLM28—50

Days to Ship — Quotation

■Material feed lifter units RoHS

Alloy steel roller type
ZORWMS
ZORWHS
Resin roller type
ZORWMP
ZORWHP

Resin roller type

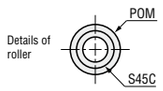

① M SK5M
② M S45C
③ IWATA RING G—8
④ Alloy steel roller type
M S45C H 45HRC～
Resin roller type
M Outside Polyacetal resin (POM)
Inside S45C
A CB8—20 2pcs.

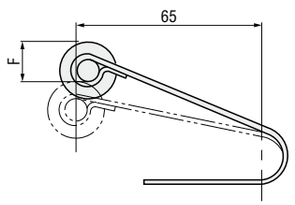

Stroke Fmax 16mm
(Recommendation range for repeated use)

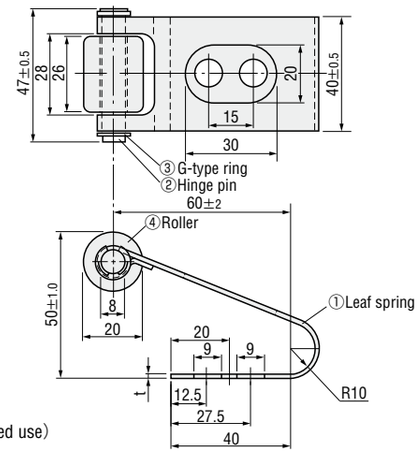

t	N/mm {kgf/mm}	Type	Catalog No.
1.4	5.88 {0.60}	Alloy steel roller type	ZORWMS
1.6	8.43 {0.86}		ZORWHS

t	N/mm {kgf/mm}	Type	Catalog No.
1.4	5.88 {0.60}	Resin roller type	ZORWMP
1.6	8.43 {0.86}		ZORWHP

● Load {kgf} =Load N×0.101972

Order — Catalog No. ZORWMS

Price — Quotation

Days to Ship — Quotation

■Sheet lifters RoHS

SLCES

SLCE

SLCES (Sheet bar: S45C)
SLCE (Sheet bar: copper alloy)

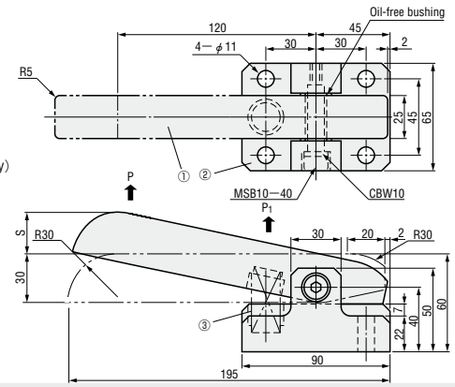

SLC

SLC

This product was discontinued in 2017.

Catalog No. : SLC

① Sheet bar M SLCES S45C
SLCE Copper alloy
② Block M FC250

Lifting load P N {kgf}		Spring load P_1 N {kgf}		Coil spring (color)	Stroke	Catalog No.	
min.	max.	min.	max.	③	S	Type	No.
18.3 {1.9}	24.5 {2.5}	73 { 7.5}	98 {10.0}	SWU17—50 (Light blue)	20	SLCES	20U
29.3 {3.0}	39.2 {4.0}	117 {12.0}	157 {16.0}	SWR17—50 (Ivory)			20R
54.9 {5.6}	73.5 {7.5}	220 {22.5}	294 {30.0}	SWS17—50 (Orange)			20S
16.9 {1.7}	24.5 {2.5}	67 { 6.9}	98 {10.0}	SWU17—50 (Light blue)	25	SLCE	25U
27.0 {2.8}	39.2 {4.0}	108 {11.0}	157 {16.0}	SWR17—50 (Ivory)			25R
51.0 {5.2}	73.5 {7.5}	202 {20.6}	294 {30.0}	SWS17—50 (Orange)		SLC	25S

Avoid using at the full stroke. It is recommended the stroke be set approximately 1mm shorter than the full stroke.

● Load {kgf} =Load N×0.101972

Order — Catalog No. SLCE 20S

Price — Quotation

Days to Ship — Quotation

Alterations — Catalog No. — (HTC・HTM)
SLCES20U — HTM

Alterations	Code	Spec.
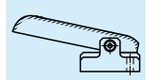	HTC	HF induction hardening on the upper surface (Sheet bar body only) 55HRC～ Cannot be used for SLCE.
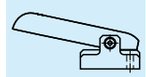	HTM	Sheet bar body plated (Elctroless nickel plating) Cannot be used for SLCE.

■Material lifters RoHS

SRL

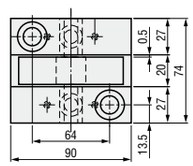

① M SUJ2 H 55～62HRC
② M SUJ2 H 55～62HRC
③ LB12—50 2pcs.
④ M SS400
⑤ S=10 ···SWF20—45 2pcs.
S=20 ···SWR21—65 2pcs.

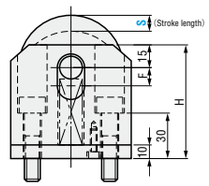

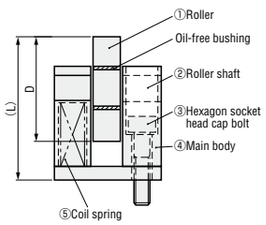

D	H	F	(L)	N {kgf} min.	N {kgf} max.	Catalog No.	
						Type	S
60	75	12	90	165 {16.8}	439 {44.8}	SRL	10
80	95	22	120	108 {11.0}	469 {47.8}		20

Order — Catalog No. SRL 20

Days to Ship — Quotation

Price — Quotation

CONVEYANCE COMPONENTS FOR AUTOMOTIVE DIES