Bearings with Housings

Double Bearings with Pilot, Non-Retained, L Configurable

Type			Material		Surface Treatment
Round	Square	Compact	Bearing	Housing	Housing
BGFRYB	BGFSYB	BGFCYB	Steel	S45C Equivalent	Black Oxide
BGFRY	BGFSY	BGFCY			Electroless Nickel Plating
BAFRY	BAFSY	BAFCY		2000series Aluminum Alloy	Clear Anodize
SBGFRY	-	-	* Stainless Steel	SUS304	-

* Bearings with Rubber Seals (VV and DD) are all made of steel.

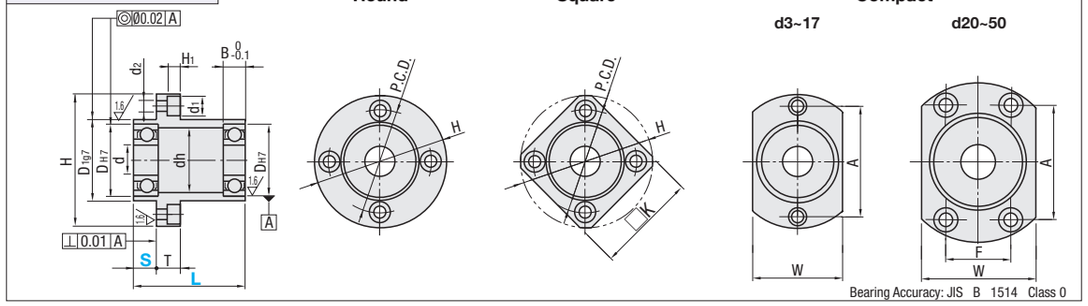

Part Number Type	Bearing No.	Seal	1mm Increment L	S	d	D_{H7}	Tolerance	B	H	W	T	dh	D_{1g7}	Tolerance	P.C.D.	K	A	F	d_1	d_2	H_1
(Round) BGFRYB BGFRY BAFRY SBGFRY (Square) BGFSYB BGFSY BAFSY (Compact) BGFCYB BGFCY BAFCY	623	ZZ Double Shielded; *1 VV Non-Contact Sealed Rubber Seal; *2 DD Contact Sealed Rubber Seal	20~40	5~28	3	10	+0.015 0	4	33	16	7	7	14	-0.006 -0.024	24	27	24	-	6.5	3.5	3.1
	624		20~40	5~28	4	13	+0.018 0	5	35	18		9	17		26	28	26				
	605		20~40	5~27	5	14		5	38	20		10	18	-0.007 -0.028	28	30	28		8	4.5	4.1
	625		30~40	10~22		16		5	40	22		12	20		30	31	30				
	606		20~40	5~27	6	17		6	41	23		13	21		31	32	31				
	626		30~50	10~32		19	+0.021 0	6	44	25		15	24		34	34	34				
	678		20~40	5~27	8	12	+0.018 0	3.5	35	18		10	16	-0.006 -0.024	26	28	26		6.5	3.5	3.1
	698		25~50	5~37		19	+0.021 0	6	44	25		15	24	-0.007 -0.028	34	34	34		8	4.5	4.1
	608		20~50	5~37		22		7	47	29		18	27		37	36	37				
	628		30~50	10~32		24		8	50	32		20	30		40	37	40				
	6700		20~40	5~27	10	15	+0.018 0	4	40	22		12	19		30	31	30				
	6800		20~40	5~27		19	+0.021 0	5	44	25		15	24		34	34	34				
	6900		20~60	5~47		22		6	47	29		19	27		37	36	37				
	6000		30~60	10~42		26		8	52	34		22	32	-0.009 -0.034	42	39	42				
	6200		40~60	15~37		30		9	56	38		24	36		46	42	46				
	6701		20~40	5~27	12	18	+0.018 0	4	44	25		15	23	-0.007 -0.028	34	34	34				
	6801		25~50	5~37		21	+0.021 0	5	47	29		17	26		37	36	37				
	6901		30~60	10~42		24		6	50	31		21	30		40	38	40				
	6001		30~60	10~42		28		8	54	36		24	34	-0.009 -0.034	44	40	44				
	6201		40~70	15~47		32	+0.025 0	10	58	40		26	38		48	43	48				
	6702		25~60	10~42	15	21	+0.021 0	4	47	29		18	26	-0.007 -0.028	37	36	37				
	6802		25~60	10~42		24		5	50	32		20	30		40	37	40				
	6902		30~70	10~50		28		7	59	37	10	25	35	-0.009 -0.034	47	45	47		9.5	5.5	5.1
	6002		40~70	15~45		32	+0.025 0	9	62	40		28	38		50	46	50				
	6202		40~70	15~45		35		11	66	44		29	42		54	49	54				
	6803		25~60	10~40	17	26	+0.021 0	5	52	34		22	32		42	39	42		8	4.5	4.1
	6903		40~70	15~45		30		7	60	38		27	36		48	46	48		9.5	5.5	5.1
	6003		40~70	15~45		35	+0.025 0	10	66	44		31	42		54	50	54				
	6203		50~70	20~40		40		12	72	50		34	48		60	54	60				
	6704		30~70	10~50	20	27	+0.021 0	4	59	35		23	33		47	45	41	23	8	4.5	4.1
	6804		35~70	10~50		32	+0.025 0	7	62	40		28	38		50	46	44	24	9.5	5.5	5.1
	6904		45~70	15~44		37		9	72	47	11	34	45	-0.010 -0.040	59	54	54	24	11	6.6	6.1
	6004		55~80	20~49		42		12	77	54		36	50		64	59	56	32			
	6204		55~80	20~49		47		14	81	58		40	54		68	62	59	34			
	6805		35~70	15~44	25	37		7	72	47		34	45	-0.009 -0.034	59	54	54	24			
	6905		35~70	15~44		42		9	77	54		36	50		64	59	55	32			
	6005		55~80	20~47		47		12	88	58	13	41	54	-0.010 -0.040	72	67	63	36	14	9	8.1
	6205		55~80	20~47		52	+0.030 0	15	94	64		45	60		78	72	68	39			
	6806		35~70	15~42	30	42	+0.025 0	7	77	54	11	36	50	-0.009 -0.034	64	59	56	32	11	6.6	6.1
	6906		35~70	15~42		47		9	88	58	13	41	54	-0.010 -0.040	72	67	62	36	14	9	8.1
	6006		55~80	20~47		55		13	96	66		48	62		80	73	70	40			
	6206		55~120	20~87		62		16	104	74		55	70		88	79	77	44			
	6607		55~120	20~87	35	62		14	104	74		55	70		88	79	75	44			
	6207		55~120	20~87		72		17	126	88	20	64	84	-0.012 -0.047	105	95	92	51	17.5	11	11
	6008		65~120	25~82	40	68		15	114	82	13	60	78	-0.010 -0.040	96	86	80	54	14	9	8.1
	6208		65~120	25~82		80		18	134	96	20	74	92	-0.012 -0.047	113	102	98	56	17.5	11	11
	6010	ZZ Double Shielded	65~120	25~82	50	80		16	134	96		74	92		113	-	98	56			
	6210		70~120	25~82		90	+0.035 0	20	147	110		83	106		126	-	104	72			

Check for available sizes in the price list.

*1 No. 623, 624, 605, 606 and numbers starting with 67 are not available for VV (Non-contact Sealed).
*2 Bearings with Rubber Seals are all made of steel.

Ordering Example

Part Number						
Type	Bearing	Seal	-	L	-	S
BAFCY	608	ZZ	-	47	-	S18
BGFRY	6200	VV	-	40		

When S is not specified, S dimension will be the minimum value.
In this case, S=15

Bearing No.	Seal	Unit Price Round BGFRYB	Round BGFRY	Round BAFRY	Round SBGFRY	Square BGFSYB	Square BGFSY	Square BAFSY	Compact BGFCYB	Compact BGFCY	Compact BAFCY
623	ZZ (x1.0) VV (x1.1) DD (x1.1)				-						
624					-						
605					-						
625					-						
606											
626											
678											
698											
608											
628											
6700											
6800											
6900											
6000											
6200											
6701											
6801											
6901											
6001											
6201											
6702											
6802											
6902											
6002											
6202											
6803											
6903											
6003											
6203											
6704											
6804											
6904											
6004											
6204											
6805			-	-			-				-
6905			-	-			-				-
6005			-	-			-				-
6205			-	-			-				-
6806			-	-			-				-
6906			-	-			-				-
6006			-	-			-				-
6206			-	-			-				-
6607			-	-			-				-
6207			-	-			-				-
6008			-	-			-				-
6208			-	-			-				-
6010			-	-	-	-	-				-
6210			-	-	-	-	-				-

The price of sealed VV and DD are the price shown in the table multiplied by 1.1.

Alterations

Part Number	-	L	-	S	-	(NA)
BAFSY6000ZZ	-	35			-	NA

Alteration	Bearings Not Assembled
Code	NA
Spec.	Bearings are shipped unassembled to the housing.