Welded Steel Stands
Shaped Steel

Type: No Hole	Type: Hole Position Configurable	M Material	S Surface Treatment
YSSTC	YSCT	SS400	-
YSSTB	YSST		Black Oxide
YSSTM	YSMT		Electroless Nickel Plating
-	YSFT	SUS304	-

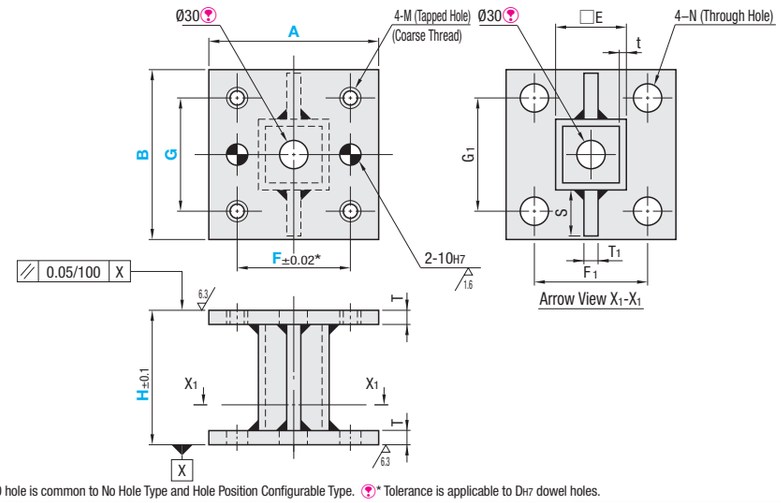

RoHS10

Ø30 hole is common to No Hole Type and Hole Position Configurable Type. * Tolerance is applicable to DH7 dowel holes.

No Hole

Part Number Type	A	B	H Selection	T	T1	E	t	S	Unit Price YSSTC H100	YSSTC H150 H200	YSSTC H250 H300	YSSTB H100	YSSTB H150 H200	YSSTB H250 H300	YSSTM H100	YSSTM H150 H200	YSSTM H250 H300
YSSTC YSSTB YSSTM	100	100	100 150 200 250 300	10	9	50	3.2	22									
		120						32									
		150						44									
	125	120				75	4.5	19									
	150	150		14	12			32									
	200	200				100		44									

Hole Position Configurable

Part Number Type	A	B	H Selection	1mm Increment G	1mm Increment F	T	T1	E	t	S	F1	G1	M	N	Unit Price YSCT H100	YSCT H150 H200	YSCT H250 H300	YSST H100	YSST H150 H200	YSST H250 H300	YSMT H100	YSMT H150 H200	YSMT H250 H300	YSFT H100	YSFT H150 H200	YSFT H250 H300
YSCT YSST YSMT YSFT	100	100	100 150 200 250 300	30~80	70~80	10	9	50	3.2	22	80	80	M10	11												
		120		30~100						32		100														
		150		30~130						44		130														
	125	120		30~100	95~100			75	4.5	19	100	100														
	150	150		35~120	95~120	14	12			32	120	120	M12	14												
	200	200		35~170	120~170			100		44	160	160														

Ordering Example

Part Number - B - H - G - F

YSSTB100 - B150 - H300

YSST150 - B150 - H200 - G100 - F95

Alterations

Part Number - B - H - G - F - (HKC)

YSST150 - B150 - H200 - G100 - F95 - HKC

Alteration	Code	Spec.
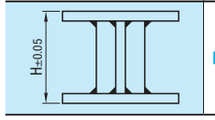	HKC	Changes the tolerance of dimension H to H±0.05. Ordering Code HKC

Welded Steel Stands
Shaped Steel, Height Configurable

Features: When the mounting hole pitch does not match with the fixed height / dimension on the left-hand page, the following standard is available.

Type	M Material	S Surface Treatment
YSCFT	SS400	-
YSSFT		Black Oxide
YSMFT		Electroless Nickel Plating

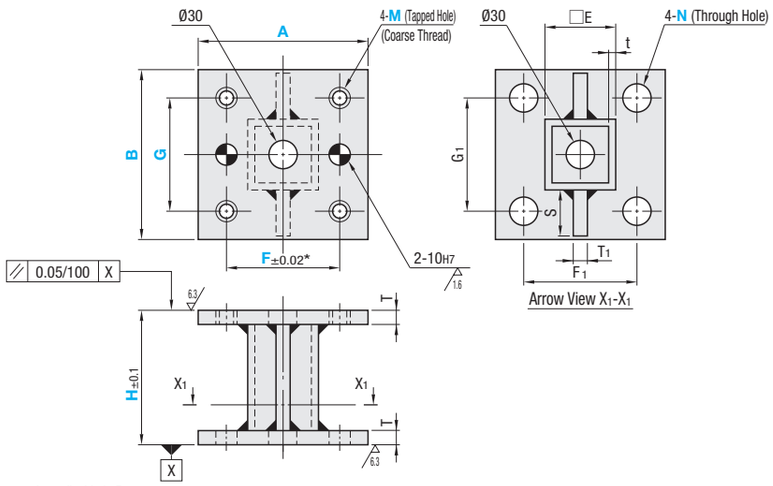

RoHS10

*Tolerance is applicable to DH7.

Part Number Type	A	B	H (1mm Increment)	G (1mm Increment)	F (1mm Increment)	M (Tapped Hole)	N (Through Hole)	T	T1	E	t	S	F1	G1
YSCFT YSSFT YSMFT	100	100	100~300	30~80	70~80	8 10 12	9 11 14	10	9	50	3.2	22	80	80
		120		30~100								32		100
		150		30~130								44		130
	125	120		30~100	95~100					75	4.5	19	100	100
	150	150		30~120	95~120			14	12			32	120	120
	200	200		30~170	120~170					100		44	160	160

Ordering Example

Part Number - B - H - G - F - M - N

YSCFT100 - B150 - H251 - G80 - F74 - M8 - N11

Alterations

Part Number - B - H - G - F - M - N - (HKC)

YSCFT100 - B150 - H251 - G80 - F74 - M8 - N11 - HKC

Alteration	Code	Spec.
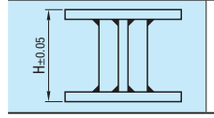	HKC	Changes the tolerance of dimension H to H±0.05. Ordering Code HKC

A	B	H 1mm Increment	Unit Price YSCFT	YSSFT	YSMFT
100	100	100~150			
		151~200			
		201~250			
		251~300			
	120	100~150			
		151~200			
		201~250			
		251~300			
	150	100~150			
		151~200			
		201~250			
		251~300			
125	120	100~150			
		151~200			
		201~250			
		251~300			
150	150	100~150			
		151~200			
		201~250			
		251~300			
200	200	100~150			
		151~200			
		201~250			
		251~300			