Features: 128mm stroke stages. Well suited for positioning and set-up changes of large and heavy objects.

X-Axis, Linear Guide

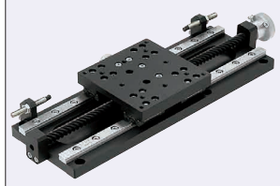

RoHS10

XLSG80

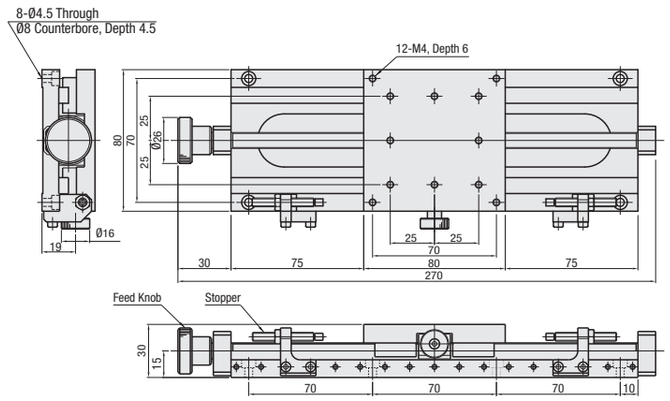

M Material: Aluminum Alloy S Surface Treatment: Black Anodize A Accessory: SCB4-10 (8pcs.)

Part Number Type	Part Number No.	Stage Surface (mm)	Travel Distance per Rotation (mm)	Travel Distance (mm)	Load Capacity (N) Horizontal	Motion Parallelism	Moment Load Capacity (N·m) Pitching	Yawing	Rolling	Parallelism	Weight (kg)	Unit Price
XLSG	80	80x80	24	128mm	147	25μm	10.6	7.5	11.5	50μm	0.9	

Travel Distance per Rotation: 24mm
Scale is not provided.

Ordering Example — Part Number: XLSG80

Features: The shaft is directly clamped with slit providing larger holding force than pushing by the feed screw.

Standard

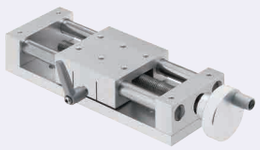

Travel per Rotation: 2.0mm

Accuracy Standards

Not recommended for precise positioning due to its clearance shown on the left.

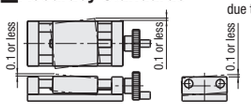

Type	Main Body Material	Main Body Surface Treatment	Shaft (Ø15) Material	Shaft (Ø15) Hardness	Feed Screw (M14) Material	Accessory
XKST	Aluminum Alloy	Clear Anodize	SUS440C Equivalent	56HRC~	SUS303	· Mounting Screw (SCB6-15 x 4 pcs.) · Scale Label

XKST

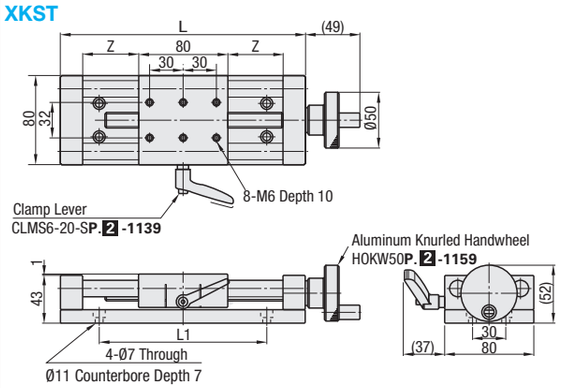

Part Number Type	Part Number No.	Stage Surface (mm)	Travel Distance (mm) (Zx2)	L	L1	Load Capacity (N) Horizontal	Weight (kg)	Unit Price
XKST	50	80x80	50	170	100	196	1.72	
	100		100	220	150		2.00	
	150		150	270	200		2.32	

For orders larger than indicated quantity, please request a quotation.

Ordering Example — Part Number: XKST50

Example

Sheet Position Adjustment

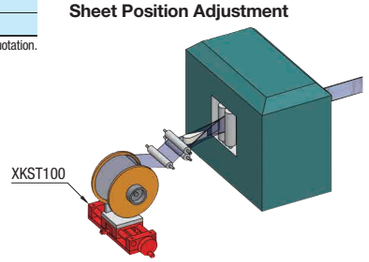

Features: Two tables open and close with an operation of a single knob, utilizing a left/right screw. For guide width adjustments and centering fixtures.

Open/Close Width Adjusting Units

RoHS10

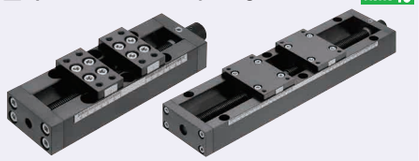

See the table below for Travel per Rotation.

Accuracy Standards

When clamped, there are some mechanical clearances as shown below, and not recommended for positioning applications requiring accuracies.

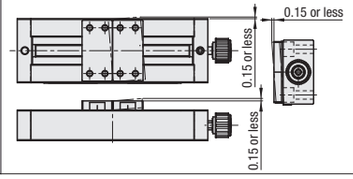

One Point

Long stroke moves can be made easily with use of a ball-point hex wrench.

XANON60

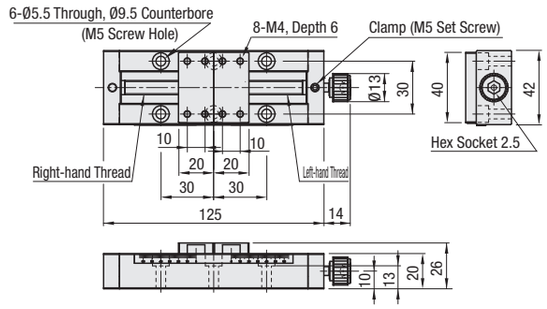

XANON150

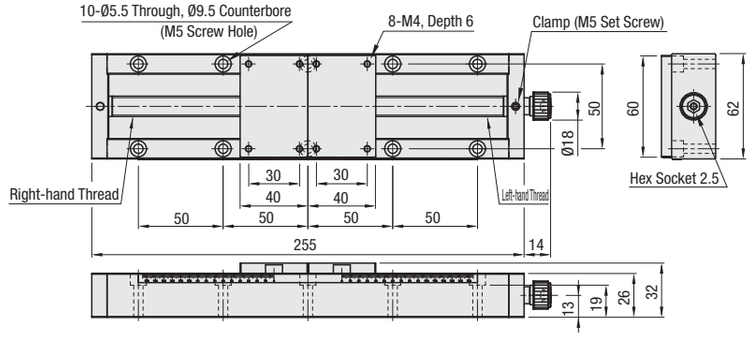

M Material: S45C
S Surface Treatment: Black Oxide
A Accessory: Hex Socket Head Cap Screw (P. 2-174, SCB5-20), 4 pcs.

Part Number Type	Part Number No.	Stage Surface (mm)	Travel Distance (mm)	Travel per Rotation (mm)	Load Capacity (N) Horizontal	Weight (kg)	Unit Price
XANON	60	40x20	60 (30 per Side)	2.5 (1.25 per Side)	98 (49 per Side)	0.64	
	150	60x40	150 (75 per Side)	3.5 (1.75 per Side)	196 (98 per Side)	2.16	

Minimum Graduation: 1mm

Ordering Example — Part Number: XANON150

Alterations — Part Number: XANON60 - (R) - R

Alteration	Position of Handle (Right and Left Side Reversed)
Spec.	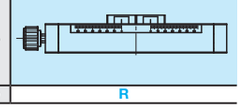
Code	R

Example

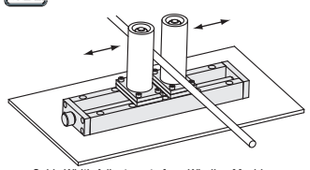

Guide Width Adjustments for a Winding Machine