[High Precision] X-Axis Dovetail Slide, Rack & Pinion

Square, Coarse/Fine Feeds

Features: Square form factor Dovetail Slide Rack & Pinion stage. The 40 and 60 sizes can be ordered with the bottom plates removed, as alterations.

X-Axis, Square

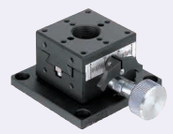

XY-Axis P.1940
Z-Axis P.1957

RoHS10

XFG25

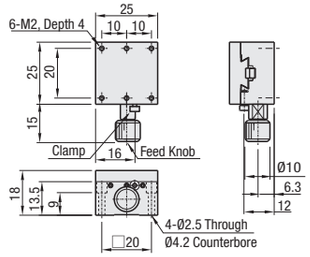

XFG40

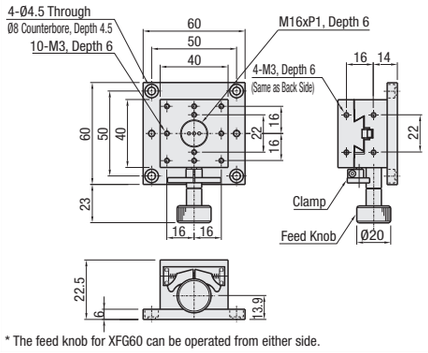

XFG60*

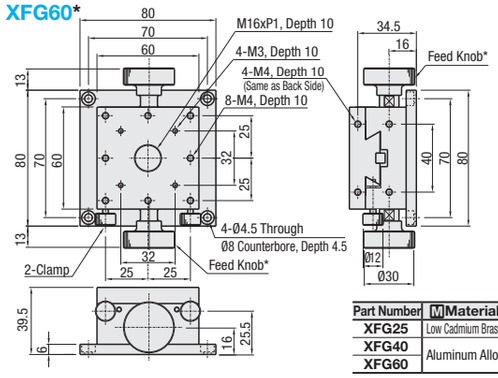

Part Number	M Material	S Surface Treatment
XFG25	Low Cadmium Brass	Black Fluororesin Treatment
XFG40	Aluminum Alloy	Black Anodize
XFG60		

* The feed knob for XFG60 can be operated from either side.

Features: Square form factor Dovetail Slide Rack & Pinion stage with Coarse/Fine combination feeds. The coarse feed knob provides approx. 18mm travel, and the fine feed knob provides approx. 2.3mm travel per one knob rotation.

X-Axis, Coarse/Fine Feeds

RoHS10

XSFG40

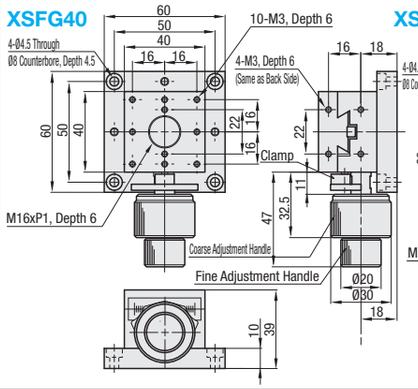

XSFG60

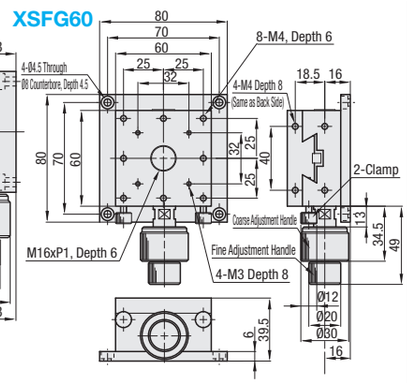

M Material: Aluminum Alloy
S Surface Treatment: Black Anodize

Part Number Type	No.	Stage Surface (mm)	Travel Distance (mm)	Travel per Rotation (mm) Coarse	Fine	Load Capacity (N) Horizontal	Vertical	Travel Accuracy (μm) Straightness	Motion Parallelism	Moment Load Capacity (N·m) Pitching	Yawing	Rolling	Parallelism (μm)	Weight (kg)	Accessory (4 pcs.) Type M-L	Unit Price
XFG	25	25x25	±5	17	-	29.4	6.9	30	80	0.5	0.5	0.5	50	0.09	SCB2-12	
	40	40x40	±10	20	-		14.7	20	30	3.0	3.0	2.0	40	0.21	SCB4-6	
	60	60x60	±20	18	-	39.2	19.6	30	50	7.0	5.0	7.0	60	0.64	SCB4-6	
XSFG	40	40x40	±10	20	≈2.6	29.4	14.7	20	30	3.0	3.0	2.0	40	0.30	SCB4-10	
	60	60x60	±20	18	≈2.3	39.2	19.6	30	50	7.0	5.0	7.0	60	0.51	SCB4-6	

Resolution (Vernier Scale Indication): 0.1mm/division

For orders larger than indicated quantity, please check with WOS.

Ordering Example: Part Number — XFG40, XSFG60

Alterations: Part Number - (M) — XSFG40 - M

See the CAD data for details.

Alteration	No Bottom Plate
Spec.	XFG40, XSFG40: 4-Ø3.5 Through (From Back), Ø6 Counterbore, Depth 10 (M3 Screw Hole); 32 XFG60, XSFG60: 2-Ø4.5 Through (From Back), Ø8 Counterbore, Depth 6 (M4 Screw Hole); 30; 50 Not applicable to XFG25. The feed knobs will interfere with the mating bases.
Code	M

[Simplified Adjustments] X-Axis, Feed Screw, Large Lead (3.0mm)

Standard/Large Handle, M6 Mounting Holes

Features: A feed screw type simplified adjustment unit with a 3.0mm 3-starts screw. Suitable for rapid feeding such as making quick fixture moves during set-up changes. Types with M6 mounting holes on the top plate are also available.

X-Axis Large Lead

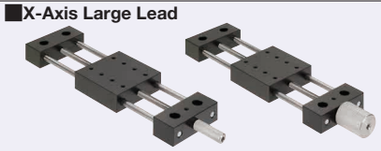

XY-Axis P.1941

Travel per Rotation: 3.0mm

Accuracy Standards

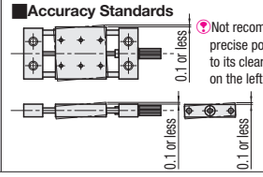

Not recommended for precise positioning due to its clearance shown on the left.

One Point

Long stroke moves can be made easily with use of a ball-point hex wrench.

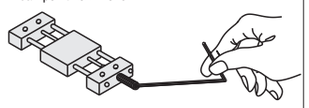

	Type: Standard Handle	Type: Large Handle	Main Body: M Material	Main Body: S Surface Treatment	Shaft: M Material	Knob: M Material	Feed Screw: M Material	A Accessory
M4 Mounting Hole	XKS	XKSL	Aluminum Alloy	Black Anodize	SUS304	SUS303	SUS304	SCB5-20, 4pcs.
M6 Mounting Holes	XKSM	XKSML						

XKS (Standard Handle, M4 Mounting Holes) XKSM (Standard Handle, M6 Mounting Holes)
XKSL (Large Handle, M4 Mounting Holes) XKSML (Large Handle, M6 Mounting Holes)

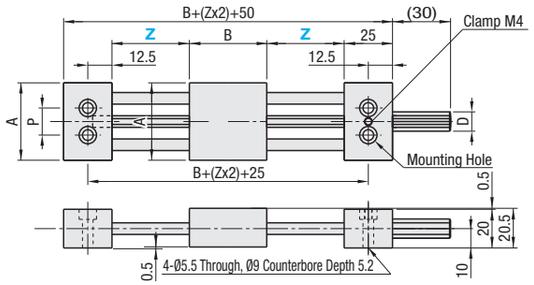

Table surfaces and bottoms are 0.5mm higher than the end mounts.

Handle Shape Comparisons

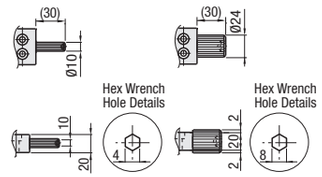

Large handle can cause interference, when used with main body plate due to its large height size.

Stage Top Mounting Hole Dimensions (* marked only for XKSM and XKSML)

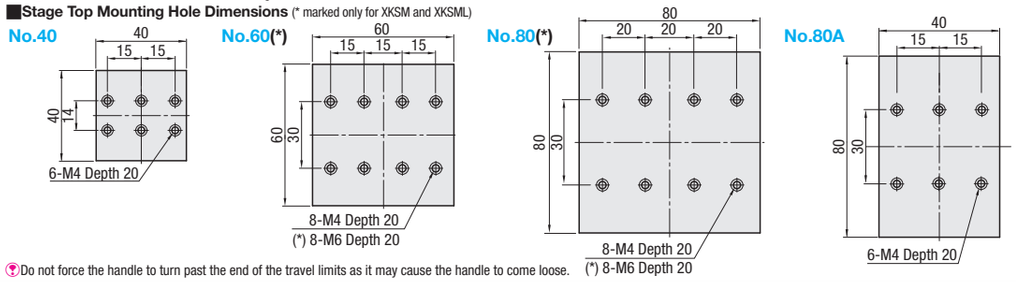

Do not force the handle to turn past the end of the travel limits as it may cause the handle to come loose.

Part Number Type	No.	Z Selection Travel Distance (Zx2)	Stage A-B (mm)	D	P	Load Capacity (N)	Unit Price XKS	XKSM	XKSL	XKSML
XKS XKSL	40	25 / 40 / 50	40x40	10 (Standard Handle) 24 (Large Handle)	14	68.6				
						58.8				
	60	25 / 50 / 75	60x60		30	68.6				
						58.8				
	80	25 / 50 / 75	80x80			63.7				
						53.9				
	80A	25 / 40 / 50	80x40			68.6				
						58.6				
XKSM XKSML	60	25 / 50 / 75	60x60			68.6				
						58.8				
	80	25 / 50 / 75	80x80			49.0				

Travel per Rotation: 3.0mm

For orders larger than indicated quantity, please request a quotation.

Ordering Example: Part Number - Z Selection — XKSL60 - Z50

Alterations: Part Number - Z Selection - (MMR, CLC) — XKSM80 - Z50 - MMR

Alteration	Mounting of a Scaled Plate on the Stage	Change of Clamp (Knurled Knob)
Spec.	Mounts a scaled plate on the stage. Minimum Graduation: 0.5mm Large Handle: Ø24, 4 Scaled Plate alteration will change the mounting hole pitch since a plate is attached to the stage. P2, P1, 6 4-Ø4.5 Through Ø7.5 Counterbore Depth 3 M Material: Aluminum Alloy S Surface Treatment: Black Anodize A Accessory: SCB4-8 x 4 pcs. A / Z / P1 / P2: 40 / 25, 40, 50 / 65, 95, 115 / 14; 60 / 25, 50, 75 / 85, 135, 185 / 30; 80 / 25, 50, 75 / 105, 155, 205 / 30; 80A / 25, 40, 50 / 65, 95, 115 / 30	Changes Clamp Screw to Knurled Knob. Ø8 10
Code	MMR	CLC