Toggle Clamps / Two-Pronged Fittings

Hold Down, Vertical Handle, Two-Pronged (Flange Base) / Long Arm (Flange Base)

1N=0.101972kgf

Hold Down, Vertical Handle,Two-Pronged (Flange Base)

(Clamped)

Part Number	MC05-1
Body Material	SS400
Surface Treatment	Trivalent Chromate
Tightening Force (N)	800~1500
Weight (g)	2000
Right and Left Travel Distance (mm)	40~80
Forward and back Travel Distance (mm)	60
Arm Open-Close Angle	150°
Handle Open-Close Angle	78°
Accessory	Bolt with Rubber Material: NBR Hardness: Shore A70
Unit Price	

Two-Pronged Fittings

RoHS10

Part Number	FTK
Body Material	SS400
Surface Treatment	Trivalent Chromate
Weight (g)	550
Toggle Clamp Arm Mounting Width	Max. 22 Min. 16
Right and Left Travel Distance (mm)	40~70
Forward and back Travel Distance (mm)	17
Unit Price	

MC05-1

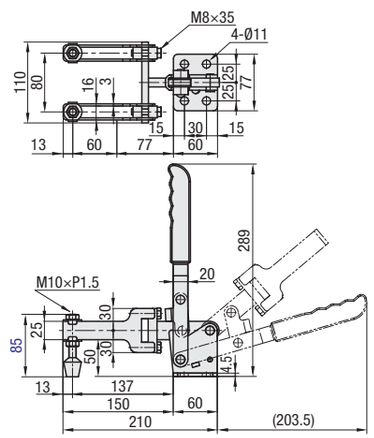

FTK

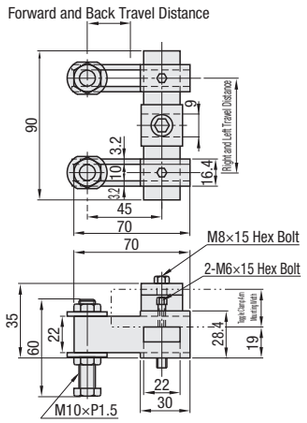

Hold Down, Vertical Handle, Long Arm (Flange Base)

(Clamped)

Part Number	MC06-1
Body Material	SS400
Surface Treatment	Trivalent Chromate
Tightening Force (N)	1000~3700
Weight (g)	1500
Arm Open-Close Angle	119°
Handle Open-Close Angle	91°
Accessory	Steel Bolt
Unit Price	

Hold Down, Vertical Handle, Long Arm, Small Type (Flange Base)

(Clamped)

Part Number	LN2BS
Body Material	SS400
Surface Treatment	Bright Chromate Plating
Tightening Force (N)	294~980
Weight (g)	500
Arm Open-Close Angle	140°
Handle Open-Close Angle	90°
Accessory	Steel Bolt
Unit Price	

MC06-1

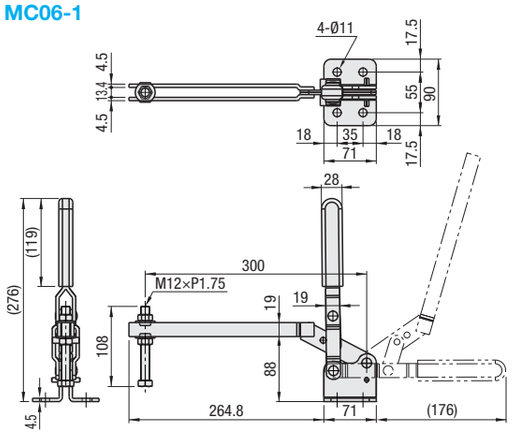

LN2BS

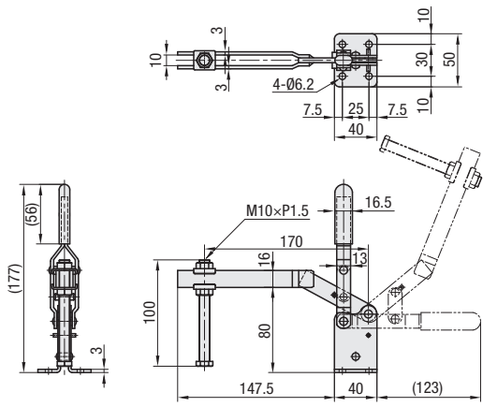

Ordering Example

Part Number
MC06-1
FTK

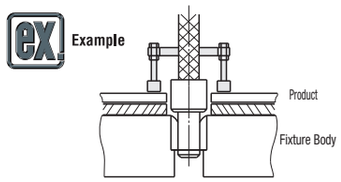

It can hold both sides of a slot pin.

Toggle Clamps

Side Push (Flange Base)

1N=0.101972kgf

Features: MC07-S3 is Stainless Type of MC07-3.

Side Push (Flange Base)

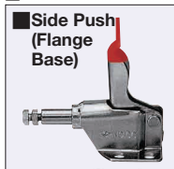

(Clamped)

* Shaft: Nickel Plating

Part Number	MC07-1
Body Material	SS400
Surface Treatment	* Trivalent Chromate
Stroke (mm)	13.6
Tightening Force (N)	490
Handle Open-Close Angle	91°
Weight (g)	70
Accessory	Steel Bolt
Unit Price	

Side Push (Flange Base)

(Clamped)

* Shaft: Nickel Plating

Part Number	MC07-2
Body Material	SS400
Surface Treatment	* Trivalent Chromate
Stroke (mm)	10
Tightening Force (N)	500
Handle Open-Close Angle	66°
Weight (g)	100
Accessory	Steel Bolt
Unit Price	

Side Push (Flange Base)

(Clamped)

* Shaft: Nickel Plating

Part Number	MC07-3	MC07-S3
Body Material	SS400	SUS304
Surface Treatment	* Trivalent Chromate	-
Stroke (mm)	30	
Tightening Force (N)	1960	
Handle Open-Close Angle	147°	
Weight (g)	370	
Accessory	Steel Bolt	Stainless Steel Bolt
Unit Price		

MC07-1

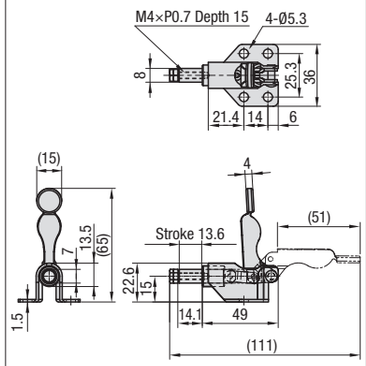

MC07-2

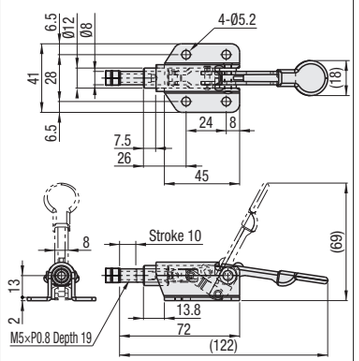

MC07-3
MC07-S3 (Stainless Steel)

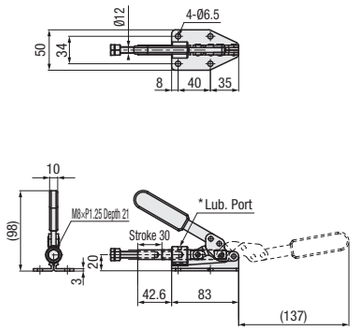

* Stainless Steel Type has no lube. port.

Side Push (Flange Base)

(Clamped)

* Shaft: Nickel Plating

Part Number	MC07-4
Body Material	SS400
Surface Treatment	* Trivalent Chromate
Stroke (mm)	12
Tightening Force (N)	1568
Handle Open-Close Angle	44°
Weight (g)	460
Accessory	Steel Bolt
Unit Price	

Side Push (Flange Base)

(Clamped)

* Shaft: Nickel Plating

Part Number	MC07-5
Body Material	SS400
Surface Treatment	* Trivalent Chromate
Stroke (mm)	12
Tightening Force (N)	1600
Handle Open-Close Angle	42°
Weight (g)	450
Accessory	Steel Bolt
Unit Price	

Side Push (Flange Base)

(Clamped)

* Shaft: Nickel Plating

Part Number	MC07-6
Body Material	SS400
Surface Treatment	* Trivalent Chromate
Stroke (mm)	30
Tightening Force (N)	1960
Handle Open-Close Angle	183°
Weight (g)	390
Accessory	Steel Bolt
Unit Price	

MC07-4

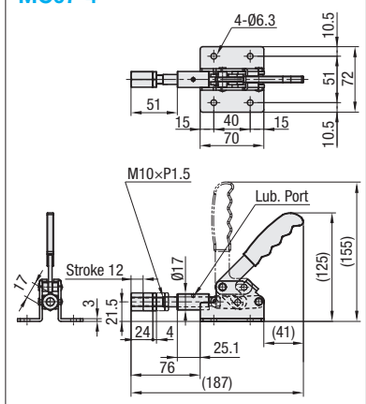

MC07-5

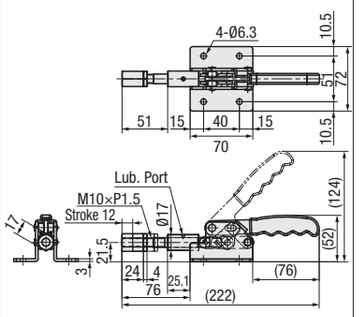

MC07-6

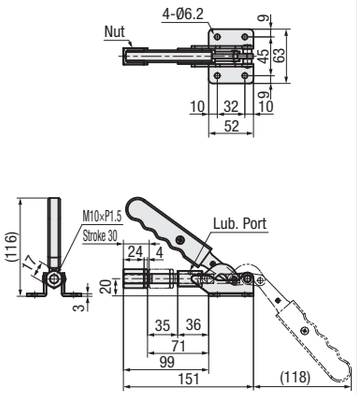

Ordering Example

Part Number
MC07-3