Tapered Plunging Locating Pin / Feed Fingers Economy Type

Features: Tapered section holds a workpiece, which enables positioning without wobbling. Similar Products: Flanged Locating Pins (P.1653)

Tapered Plunging Locating Pin

Type	Pin		Body			Spring	Oil Free Bushing
	M Material	H Hardness	M Material	H Hardness	S Surface Treatment	M Material	M Material
PICP	SKD11	60~63HRC	S45C	23~30HRC	Electroless Nickel Plating	SWP-B	Special Bronze Casting

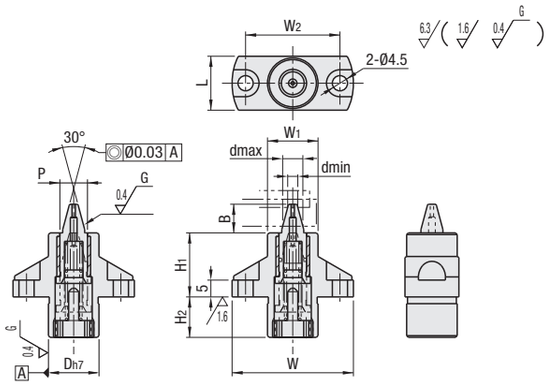

Load Table

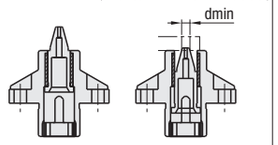

Spring		No.6	No.10
Load (N)	min	6.3	5.8
	max	19.9	20.1
Spring Constant (N/mm)		1.8	1.4

RoHS10

Part Number Type	No.	Applicable Hole Dia. Max. Hole Dia. dmax	Min. Hole Dia. dmin	D	P	B	H_1	H_2	W	W_1	W_2	L	Unit Price
PICP	6	6	3	15	8.2	8.5	19	12	36	15	28	16	
	10	10	6	19	12.2	12	24	17	40	19	32	20	

Ordering Example

Part Number
PICP6

Example

The pin sinks and the tapered section holds a workpiece without wobbling. Changeover is not necessary when used within the applicable hole diameter, which enables high productivity and operability.

Height Adjusting Blocks (P.1653) can be used together.

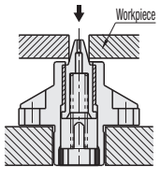

Features: Use of sheet metal for the main body has realized price reduction by approx. 50%, compared to the conventional products.

Feed Fingers Economy Type

Type	M Material			
	Claw	Main Body	Pin	Spring
ATBES	SUS304-CP	SUS304-CP	SUS304	SUS304-WPB
ATBEM	MC Nylon			

RoHS10

ATBES10-L

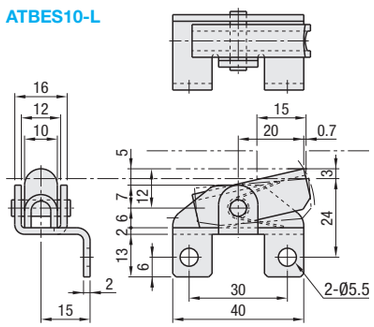

ATBEM10-R

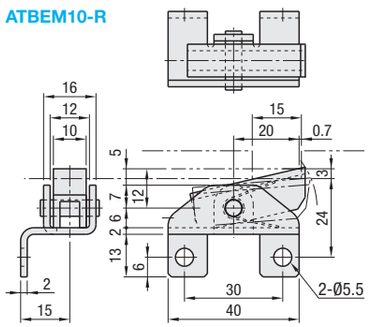

Part Number Type	No.	Claw Orientation		Load (Calculated Value) N Stroke 3mm	Stroke 5mm	Mass (g)	Unit Price 1 ~ 3 pc(s).	Volume Discount Rate 4 ~ 9 pcs.	10 ~ 30 pcs.	31 pcs. or more
ATBES	10	L	(Left)	8.3	8.9	45				
		R	(Right)							
ATBEM	10	L	(Left)	8.1	8.7	35				
		R	(Right)							

For orders larger than indicated quantity, please request a quotation.

Ordering Example

Part Number	-	Claw Orientation
ATBES10	-	L
ATBEM10	-	R

Automatic Latches

Features: Thin-plated workpieces such as printed circuit boards and metal plates can be easily located.

Type	① Claw			② Base			③ Spring
	M Material	H Hardness	S Surface Treatment	M Material	H Hardness	S Surface Treatment	M Material
ATLAM	S45C	20~35HRC	Electroless Nickel Plating	S45C	-	Electroless Nickel Plating	SUS304-WPB
ATLAS	SUS304	-	-	SUS304	-	-	
ATLAN	MC Nylon	-	-				

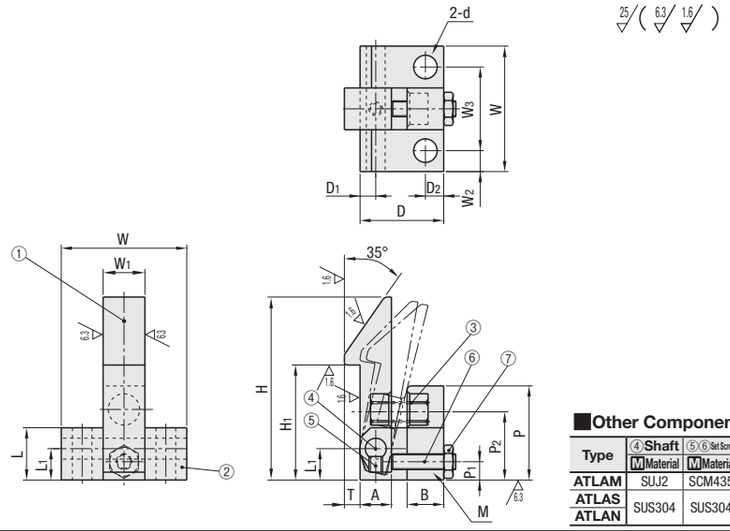

RoHS10

Other Components

Type	④ Shaft M Material	⑤⑥ Set Screw M Material	⑦ Nut M Material / S Surface Treatment
ATLAM	SUJ2	SCM435	SWCH, Trivalent Chromate
ATLAS / ATLAN	SUS304	SUS304	SUS304

Part Number Type	No.	H	H_1	T	W	W_1	W_2	W_3	d	L	L_1	D	D_1	D_2	A	B	P	P_1	P_2	M (Coarse)
ATLAM ATLAS ATLAN	25	25	15	2	20	7	3	14	3.5	8	5	14	2.5	3	5	6	15	3.5	11	M3
	35	35	22	3	24	8	4	16	4.5	10	6	16	3	3.5	6	7	18	3.5	13.5	M3
	45	45	30	4	26	10	4	18	4.5	12	7	20	4	4	8	8	22	4.5	17	M4

Ordering Example

Part Number
ATLAM25
ATLAS45

No.	Unit Price ATLAM	ATLAS	ATLAN
25			
35			
45			

Example Clicks and latches the workpiece easily at the required position just by lowering the workpiece from above.

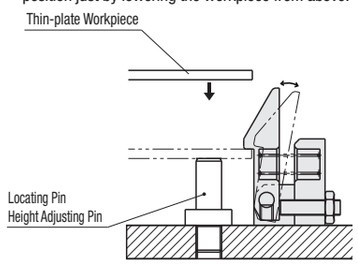

Claws Stroke Position Variations

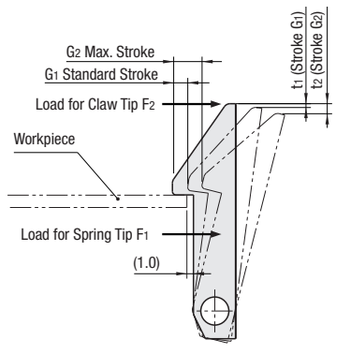

No.	G_1	G_2	t_1	t_2
25	1	3.2	0.3	1.4
35	2	4.2	0.5	1.4
45	3	6.3	0.5	1.6

* 1.0mm clearance is assumed.

Spring Load Table (Calculated Value)

No.	Spring Tip F_1 (N) Initial Load	Stroke G_1	Stroke G_2	Claw Tip F_2 (N) Initial Load	Stroke G_1	Stroke G_2
25	1.2	1.3	1.7	0.4	0.4	0.5
35	2.0	2.4	2.9	0.5	0.6	0.8
45	3.9	5.1	6.5	1.0	1.3	1.7