Pulleys for Round Belts

Set Screw Type

Trapezoid Groove Shape A	Trapezoid Groove Shape B	U Groove Shape A	U Groove Shape B	M Material	S Surface Treatment
MBRDF	MBRD	MBRF	MBR	S45C Equivalent	Black Oxide
MBRDFM	MBRDM	MBRFM	MBRM		Electroless Nickel Plating
-	MBRDS	-	MBRS	SUS304	-
MBRDFA	MBRDA	MBRFA	MBRA	Aluminum Alloy	Clear Anodize

Shaft Hole: H Round Hole / P Round Hole + Tap / C Old JIS Keyway + Tap / N New JIS Keyway + Tap

Trapezoid Groove

A Shape: MBRDF, MBRDFM, MBRDFA

B Shape (With Hub): MBRD, MBRDM, MBRDS, MBRDA

U Groove

A Shape: MBRF, MBRFM, MBRFA

B Shape (With Hub): MBR, MBRM, MBRS, MBRA

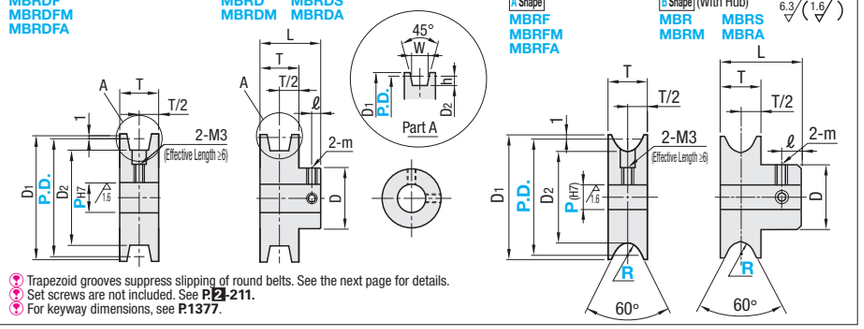

RoHS10

Trapezoid grooves suppress slipping of round belts. See the next page for details.
Set screws are not included. See P.2-211.
For keyway dimensions, see P.1377.

Part Number Type	P.D.	Belt Radius Trapezoid	R U Groove	Shaft Bore Specification, I.D. Selection 1mm Increment H, P(H7)	N (New JIS)	C (Old JIS)	D1	D2	h	W	T	L	ℓ	D	m	Applicable Belt Dia.	Unit Price MBRDF MBRF	MBRDFM MBRFM	MBRDFA MBRFA	MBRD MBR	MBRDM MBRM	MBRDS MBRS	MBRDA MBRA
	*15	1		4~7	-	-	17	13	1	2.2	5	11	3	12	M3	2	-	-	-				
	*20			4~12	8, 10, NK10		22	18						16									
	*30						32	28						20									
	*40						42	38															
	20	1.5		4~12	8		22	17	1.5	3.3	10	16	3	16	M3	3							
	30			5~12	8, 10, NK10		32	27						20									
	40						42	37															
	45			5~20	8~20 (8~15)	10	47	42				20	5	25	M4								
	60						62	57															
Trapezoid Groove A Shape MBRDF MBRDFM MBRDFA B Shape MBRD MBRDM MBRDS MBRDA	18	2		5~12	(8)	-	20	14	2	4.4	10	16	3	16	M3	4							
	23				8, 10, NK10		25	19						20									
	28						30	24															
	30						32	26															
	40						42	36															
	45			5~20	8~20 (8~15) NK10	10	47	41				20	5	25	M4								
	48						50	44															
	60						62	56															
	80						82	76															
	28	2.5		5~12	8, 10, NK10	-	30	23	2.5	5.5	10	16	3	20	M3	5							
	40			5~20	8~20 (8~15) NK10	10	42	35				20	5	25	M4								
	48						50	43															
	50						52	45															
	60						62	55															
	75						77	70															
	80						82	75															
U Groove A Shape MBRF MBRFM MBRFA B Shape MBR MBRM MBRS MBRA	28	3		5~12	8, 10, NK10	-	30	22	3	6.6	10	16	3	20	M3	6							
	38						40	32				20	5	25	M4								
	48			5~20	8~20 (8~15) NK10	10	50	42															
	50						52	44															
	58						60	52															
	60						62	54															
	75						77	69															
	80						82	74															
	95						97	89															
	100						102	94															
	50	4		5~20	8~20 NK10	10 12 15	52	42	4	8.8	12	24	6	30	M4 (M5) *1	8							-
	60						62	52															-
	80						82	72															-
	100						102	92															-
	120						122	112															-
	60	5		5~20	8~20 NK10	10 12 15	62	50	5	11	15	27	6	30	M4 (M5) *1	10							-
	80						82	70															-
	100						102	90															-
	120						122	110															-
	140						142	130															-

Shaft Hole Dia. 6.35 is available for Shaft Hole Specification H and P. Values in ( ) are for Shape B.
Shaft Hole Dia. 9 is not available for Shaft Hole Specification N.
Sizes with * will be B Shaps only. *1 When shaft diameter is 15mm or more, set screw size is (M5).
For keyway dimensions, see P.1377.
Specify NK10 when Keyway + Tap with shaft bore dia. 10 and keyway width 4.0mm (height 1.8mm) is desired.

Ordering Example

Part Number	-	Belt Radius	-	R	-	Shaft Bore Specification, I.D.
MBRDF30	-	1.5			-	H5
MBR60			-	2	-	N12

Alterations

Part Number	-	Belt Radius	-	R	-	Shaft Bore Specification, I.D.	-	(DC)
MBRD40	-	1.5			-	H6	-	DC

Alteration	O.D. Cut
Code	DC
Spec.	Reduces D1 diameter by cutting. Ordering Code DC

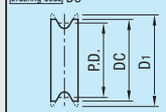

Belt Radius R Applicable	DC
1	P.D.+0.8
1.5	P.D.+1.2
2	P.D.+1.6
2.5	P.D.+1.8

Applicable to corresponding belt radius R 1, 1.5, 2, 2.5 only.
Surface treatment may not be applied to the machined area.

Pulleys for Round Belts

Clamping Type

Type Trapezoid Groove	Type U Groove	M Material	S Surface Treatment	A Accessory
MBRDC	MBRC	S45C Equivalent	Black Oxide	Hex Socket Head Cap Screw (x2) SCM435
MBRDAC	MBRAC	Aluminum Alloy	Clear Anodize	Hex Socket Head Cap Screws (x2) Stainless Steel

Tolerance d is the tolerance before slitting.

Trapezoid Groove MBRDC MBRDAC

U Groove MBRC MBRAC

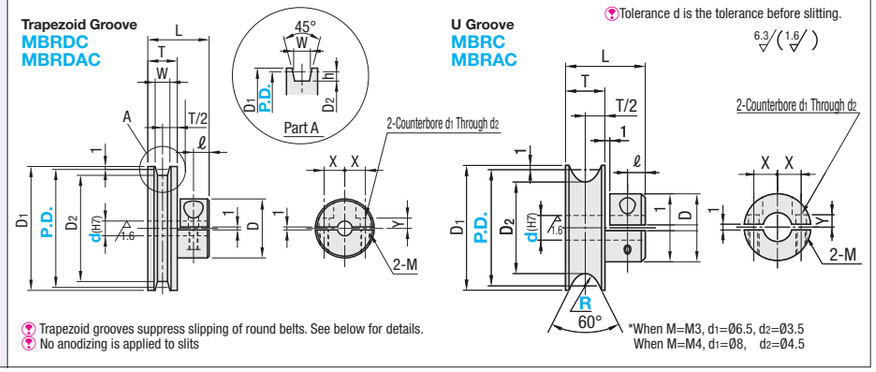

RoHS10

Trapezoid grooves suppress slipping of round belts. See below for details.
No anodizing is applied to slits

*When M=M3, d1=Ø6.5, d2=Ø3.5
When M=M4, d1=Ø8, d2=Ø4.5

Part Number Type	P.D.	Belt Radius Trapezoid	R U Groove	d (H7) Selection	D	D1	D2	h	W	L	T	ℓ	X	Y	M	Applicable Belt Dia.	Unit Price MBRDC MBRC	MBRDAC MBRAC
	20	1		4 5	16	22	18	1	2.2	11	5	2.5	5	3	M3	2		
	30			4 5 6 6.35 8	20	32	28						7	3.5				
	40					42	38											
	30	1.5		5 6 6.35 8	20	32	27	1.5	3.3	16	10	2.5	7	3.5	M3	3		
	40					42	37											
	45			5 6 6.35 8 10 11 12	25	47	42			20		4.5	9	4.5	M4			
	60					62	57											
Trapezoid Groove MBRDC MBRDAC	23	2		5 6 6.35 8	20	25	19	2	4.4	16	10	2.5	7	3.5	M3	4		
	28					30	24											
	30					32	26											
	40					42	36											
	45			5 6 6.35 8 10 11 12	25	47	41			20		4.5	9	4.5	M4			
	48					50	44											
	60					62	56											
	80					82	76											
U Groove MBRC MBRAC	28	2.5		5 6 6.35 8	20	30	23	2.5	5.5	16	10	2.5	7	3.5	M3	5		
	40			5 6 6.35 8 10 11 12	25	42	35			20		4.5	9	4.5	M4			
	48					50	43											
	50					52	45											
	60					62	55											
	75					77	70											
	80					82	75											
	28	3		5 6 6.35 8	20	30	22	3	6.6	16	10	2.5	7	3.5	M3	6		
	38			5 6 6.35		40	32			20		4.5	6.5		M4			
	48			5 6 6.35 8 10 11 12	25	50	42						9	4.5				
	50					52	44											
	58					60	52											
	60					62	54											
	75					77	69											
	95					97	89											
	100					102	94											

Ordering Example

Part Number	-	Belt Radius	-	R	-	d
MBRDC30	-	2			-	5
MBRC60			-	2.5	-	6

Alterations Left-hand Page

<Difference of Slip Torque for Trapezoid and U Grooves> * Index numbers as compared with values for U groove as base value (100)

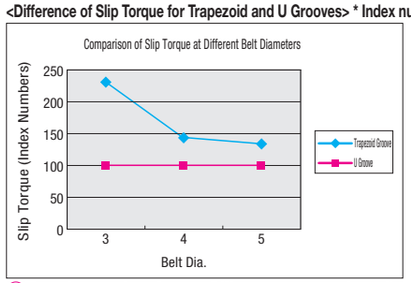

■Test Conditions
・Size: P.D. 60
・Material: A5052, Surface Treatment: Black Oxide
・Belt: MBT3, 4, 5 (P.1371)

Trapezoid Groove Shape

U Groove Shape

Slip torque is improved with a trapezoid-grooved pulley, as it contacts belts with 3 surfaces, while U-grooved pulley contacts belts with one surface.

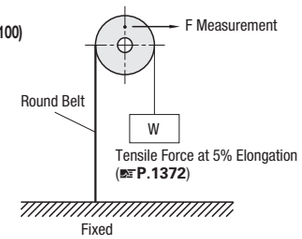

The values are for reference. Difference may vary depending on operating environment.